TOSHIBA

FILE NO. 030-200115

SERVICE MANUAL

COLOUR TELEVISION

C01P Chassis

42WH18P
50WH18P

PUBLISHED IN JAPAN Sep., 2001 (So)

TABLE OF CONTENTS

CHAPTER 1 **GENERAL ADJUSTMENTS**

SAFETY INSTRUCTIONS 3
CRT ASSEMBLY REPLACEMENT AND MOUNTING 4
PICTURE TUBE COMPONENTS ADJUSTMENT 6
SERVICE POSITION 9
SERVICE MODE 10
DESIGN MODE 13
ELECTRICAL ADJUSTMENT 14
CONVERGENCE ADJUSTMENT 21
SCREEN AND MIRROR ALIGNMENTS 30
CIRCUIT CHECKS 31

CHAPTER 2 **SPECIFIC INFORMATIONS**

SETTING & ADJUSTING DATA 32
LOCATION OF CONTROLS 33
CIRCUIT BLOCK DIAGRAM 35
MECHANICAL DISASSEMBLY 36
CHASSIS AND CABINET REPLACEMENT PARTS LIST 41
PC BOARDS LAYOUT TOP VIEW 68
PC BOARDS BOTTOM VIEW 69
TERMINAL VIEW OF TRANSISTORS 82
SPECIFICATIONS 87
APPENDIX:
CIRCUIT DIAGRAM

CHAPTER 1 GENERAL ADJUSTMENTS

SAFETY INSTRUCTIONS

WARNING: BEFORE SERVICING THIS CHASSIS, READ THE "X-RAY RADIATION PRECAUTION", "SAFETY PRECAUTION" AND "PRODUCT SAFETY NOTICE" INSTRUCTIONS BELOW.

X-RAY RADIATION PRECAUTION

1. Excessive high voltage can produce potentially hazardous X-RAY RADIATION. To avoid such hazards, the high voltage must not be above the specified limit. The nominal value of the high voltage of this receiver is (A) kV at zero beam current (minimum brightness) under a (C) V AC power source. The high voltage must not, under any circumstances, exceed (B) kV.

   Refer to table-1 for high voltage (A), (B) & AC voltage (C). (See SETTING & ADJUSTING DATA on page 32)

   Each time a receiver requires servicing, the high voltage should be checked following the HIGH VOLTAGE CHECK procedure in this manual. It is recommended that the reading of the high voltage be recorded as a part of the service record. It is important to use an accurate and reliable high voltage meter.
2. The only source of X-RAY RADIATION in this TV receiver is the picture tube. For continued X-RAY RADIATION protection, the replacement tube must be exactly the same type tube as specified in the parts list.
3. Some part in this receiver have special safety-related characteristics for X-RAY RADIATION protection. For continued safety, parts replacement should be undertaken only after referring to the PRODUCT SAFETY NOTICE below.

SAFETY PRECAUTION

WARNING : Service should not be attempted by anyone unfamiliar with the necessary precautions on this receiver. The following are the necessary precautions to be observed before servicing this chassis.

1. An isolation transformer should be connected in the power line between the receiver and the AC line before any service is performed on the receiver.
2. Always discharge the picture tube anode to the CRT conductive coating before handling the picture tube. The picture tube is highly evacuated and if broken, glass fragments will be violently expelled. Use shatter proof goggles and keep picture tube away from the unprotected body while handling.
3. When replacing a chassis in the cabinet, always be certain that all the protective devices are put back in place, such as; non-metallic control knobs, insulating covers, shields, isolation resistor-capacitor network etc.

PRODUCT SAFETY NOTICE

Many electrical and mechanical parts in this chassis have special safety-related characteristics. These characteristics are often passed unnoticed by a visual inspection and the protection afforded by them cannot necessarily be obtained by using replacement components rated for higher voltage, wattage, etc. Replacement parts which have these special safety characteristics are identified in this manual and its supplements; electrical components having such features are identified by the international hazard symbols on the schematic diagram and the parts list.
Before replacing any of these components, read the parts list in this manual carefully. The use of substitute replacement parts which do not have the same safety characteristics as specified in the parts list may create shock, fire, X-ray radiation or other hazards.

CRT ASSEMBLY REPLACEMENT AND MOUNTING

CAUTION : DO NOT LOOSEN THE HEX HEAD BOLTS WITH SPRINGS (12 PCS), BECAUSE THOSE ARE FOR SEALING OF CRT COOLANT.

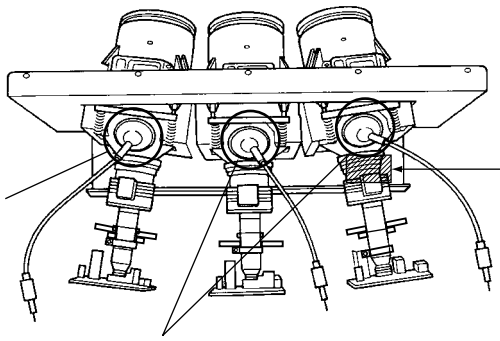

Attention Serviceman

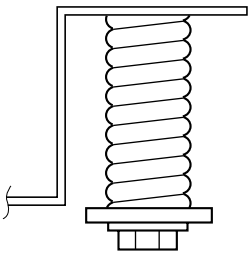

The Hex Head Bolts with Springs. (see sketch) used on CRT assembly, are "NOT" Adjustment Screws DO NOT LOOSEN-FLUID LEAKAGE WILL OCCUR.

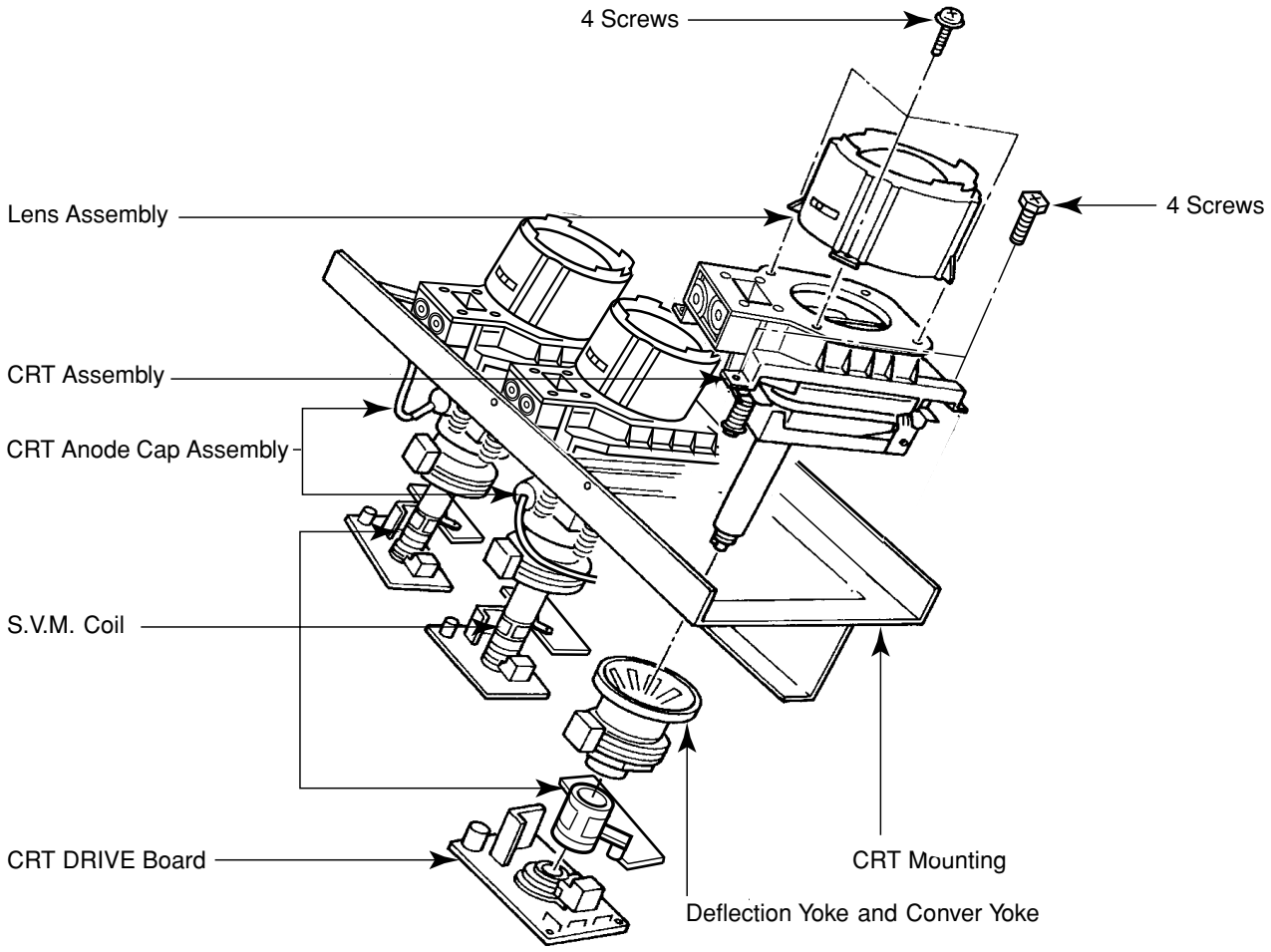

Lens and Neck Components View

TO REMOVE CRT (Same procedure for R, G, B)

1. Remove CRT DRIVE Board, S. V. M. COIL and DEF. YOKE from CRT.
2. Remove Lens Assembly.
3. Detach CRT Anode Cap from CRT.
4. Remove CRT Assembly from CRT Mounting.

CRT REPLACEMENT (Same procedure for R, G, B)
Reverse the removal procedures except the followings.

1. Anode Cable should be replaced with new one. See "SERVICING PRECAUTIONS" shown below.
2. Install silicon (T461B) to the CRT, replace the Anode cable and put enough silicon again on around the Anode Cap as illustrated.

CAUTION: Align the Anode cable as illustrated on page 4.

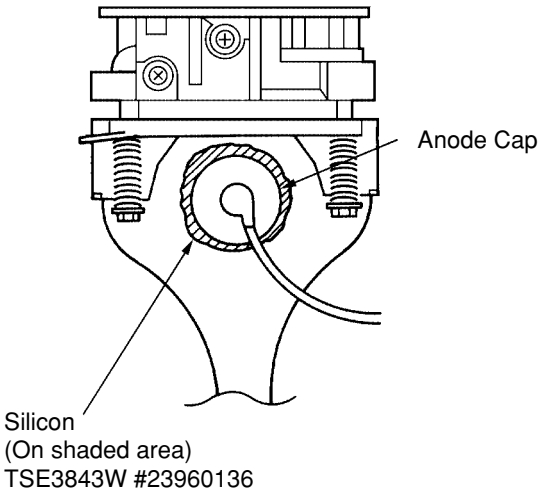

ADJUSTING PROCEDURE IN REPLACING CRT

1. R.G.B. CUTOFF (SCREEN VR) ADJUSTMENT (page 6.)
2. R.G.B. FOCUS ADJUSTMENT (page 6.)
3. PICTURE TILT ADJUSTMENT (page 7.)
4. USER CONVERGENCE CENTER CHECK (Refer to owner's manual.)
5. CENTERING ADJUSTMENT (page 7.)
6. CONVERGENCE ADJUSTMENT (page 21.)
7. WHITE BALANCE ADJUSTMENT (page 14.)

Adjustments are complete.

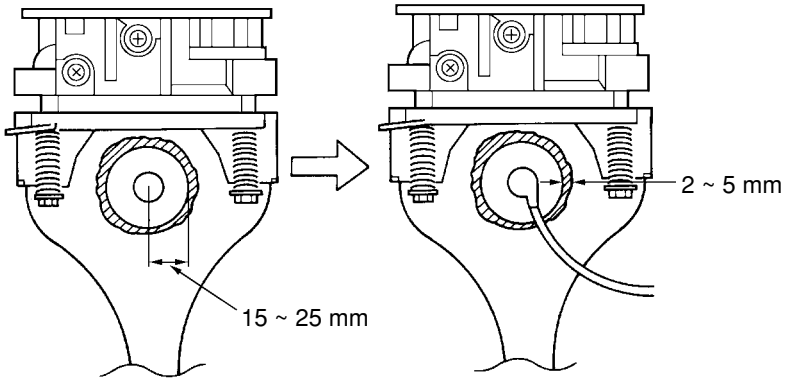

SERVICING PRECAUTIONS

■ Do not use a magnetized screw driver for screws of Deflection Yoke and Velocity Modulation Coil to avoid magnetization of electron gun. Magnetization of electron gun will degrade basic function and result in unbalance of right and left shift of user static convergence, and result in no variable quantity.

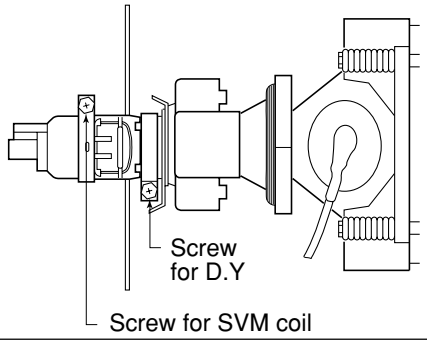

■ When replacing the anode cap assembly (CRT) or anode lead assembly (F.B.T.), remove the anode lead holder from old one and attach the holder again to new anode lead.

■ Check the point of anode lead in a straight line, if it is winding, please revise it.

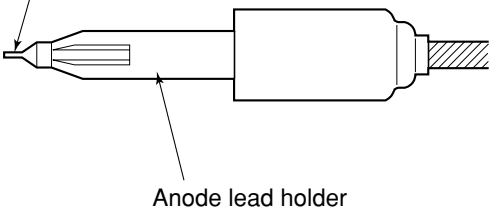

WARNING: BEFORE SERVICING THIS CHASSIS, READ THE "X-RAY RADIATION PRECAUTION", "SAFETY PRECAUTION" AND "PRODUCT SAFETY NOTICE" ON PAGE 3 OF THIS MANUAL.

PICTURE TUBE COMPONENTS ADJUSTMENT

ADJUSTING PROCEDURE IN REPLACING CRT

Cutoff
↓
Lens focus
↓
Electrical focus
↓
Yoke horizontal
→ User convergence center check
↓
Centering (PAL)
↓
Convergence adjustment (PAL/NTSC)
↓
White balance
↓
Sub bright adjustment
↓
End

DESCRIPTION OF NECK COMPONENTS

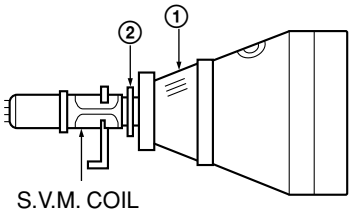

① Deflection yoke and convergence yoke.
The position on the neck is required most front (CRT funnel side) and the screw is fastened after rotating yoke adjusting picture tilt.

② Centering magnet
After adjusting picture tilt, picture position is finally fixed by this magnet.
In order to get maximum margin of user convergence control for center of screen, this magnet have to be used for center convergence adjustment.

PREPARATION
Operate the receiver for at least 5 minutes.

R, G, B CUTOFF (SCREEN VR) ADJUSTMENT

1. Adjust before replace the screen assembly.
2. Set user control to reset position.
   (CONTRAST → Max
   BRIGHTNESS, COLOR, TINT → Center.)
3. Call up the adjustment mode display, then select the item RCUT.
4. Adjust the data of items **RCUT**, **GCUT**, and **BCUT** to "40H".
5. Press the button on Remote. (Y-MUTE : ON)
6. Gradually rotate R, G and B screen volume of FOCUS PAC clockwise or counterclockwise until the raster appears slightly on the CRT through the each lens, and leave them.
   (Lookin to the lens in order to check the raster.)
7. Press the button on Remote. (Return to Normal Picture)

RGB FOCUS ADJUSTMENT

1. Call-up the adjustment mode (see page 10)
2. Press button on the remote controller in order to display the internally-generated cross-hatch (See TEST SIGNAL SELECTION on page 11.)
3. Expose only RED by covering the GREEN and BLUE lenses with caps.
4. Loosen the RED lens fixing screws (refer to Fig. a), and adjust the RED lens focus to obtain the sharpest point while observing the middle and peripheral sections of the screen.

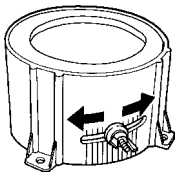

Fig. a

5. Use the focus VR of "R" of the focus pack in order to adjust the electric focus in the middle and peripheral sections of the screen to its sharpest level.
6. Check the RED focus of the whole screen and if necessary repeat steps 4 and 5.
7. Fix the RED lens by tightening its fixing screws.
8. Expose only GREEN by covering the RED and BLUE lenses with caps.
9. Display the internally-generated cross-hatch signal.
10. Adjust the GREEN lens focus on the left border of the screen to its sharpest level, then check the focus on the right border, and if it is at its sharpest level, fix it in that position by tightening the lens screws.

    (1) If the horizontal line toward the right border is red-flared, turn the lens screw slightly right in order to balance it with the left border. (After adjustment, the left border tends to be slightly green-flared, and the right border tends to be slightly red-flared.)
    (2) If the horizontal line toward the right border is green-flared, turn the lens screw slightly left in order to balance it with the left border. (After adjustment, the left border tends to be slightly red-flared, and the right border tends to be slightly green-flared.)

Note: The aim of the above-described adjustment procedure for the Green lens focus is to obtain the best lens focus after 2 - 3 hours of warming up taking into account the focus drift; it applies if the warming up time before the adjustment is less than 30 minutes. (The horizontal line in the screen middle section tends to be slightly red-flared.)

In case of warming up of more than 2 hours under a condition that the large anode current is running through the projection tube so that for example the all-white pattern appears, adjust to obtain the sharpest focus while observing the whole screen like in the RED case.

11. Press button on the remote controller in order to display the internally-generated black cross-hatch. (See TEST SIGNAL SELECTION on page 11.)

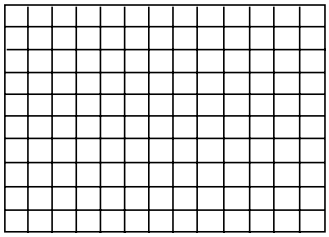

12. Use the focus VR of "G" of the focus pack in order to adjust the electric focus in the middle section of the screen to its sharpest level.

Note: Normally the most clearly visible point of the scanning line is the sharpest point of the Green focus, however as the characteristics vary depending on the projection tube, the sharpest focus points of the vertical and horizontal lines may not match each other, thus when you turn the focus VR, if the picture tends to be tremendously unstable (rolls horizontally or vertically), adjust the balance of the vertical and horizontal lines to its best position.

13. Check the GREEN focus of the whole screen and if necessary repeat steps 10 and 11.
14. Fix the GREEN lens by tightening up its fixing screws.
15. Expose only BLUE by covering the RED and GREEN lenses with caps.
16. Press button on the remote controller in order to display the internally-generated cross-hatch (See TEST SIGNAL SELECTION on page 11.)
17. Loosen the BLUE lens fixing screws (refer to Fig. a), and adjust the BLUE lens focus while observing the middle and peripheral screen sections.
18. Press button on the remote controller in order to display the internally-generated black cross-hatch (See TEST SIGNAL SELECTION on page 11.)
19. Use the focus VR of "B" of the focus pack in order to adjust the focus in the middle section of the screen to its sharpest level.
    (The point of the Blue focus becomes sharpest when the brightness level of BLUE is lowest, the cross-hatch is clearly visible.)

Note: Keep in mind that only the BLUE electric focus is adjusted with the black cross-hatch.

20. Check the BLUE focus of the whole screen and if necessary repeat steps 17 and 19.
21. Fix the BLUE lens by tightening its fixing screws.

TILT ADJUSTMENT

Rotate R, G, B deflection yoke so that picture becomes horizon, then fasten screw.

CENTERING ADJUSTMENT

1. Stretch a thread between two center of screen edge (top and bottom, left and right).

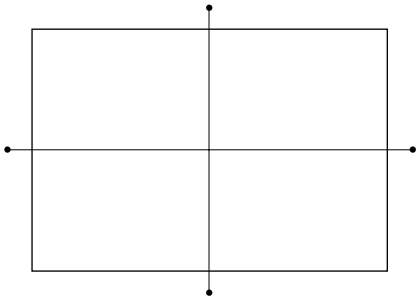

2. Select the adjustment mode. (See page 10.)
3. Press button on the Remote Control to display the black cross-hatch.

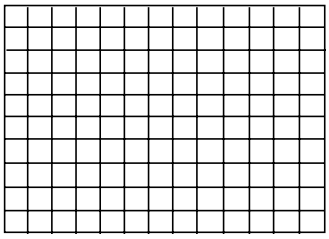

4. Adjust G centering magnet so that the cross-hatch pattern center comes to screen center.
5. Perform HEIGHT adjustment . (See page 14.)
6. Perform WIDTH adjustment. (See page 14.)
7. Check whole quality of green line.
8. Adjust R, B centering magnet so that the cross-hatch pattern center comes to screen center.

LOCATION OF SCREEN AND FOCUS VR'S

To remove the Speaker grille and Front panel.

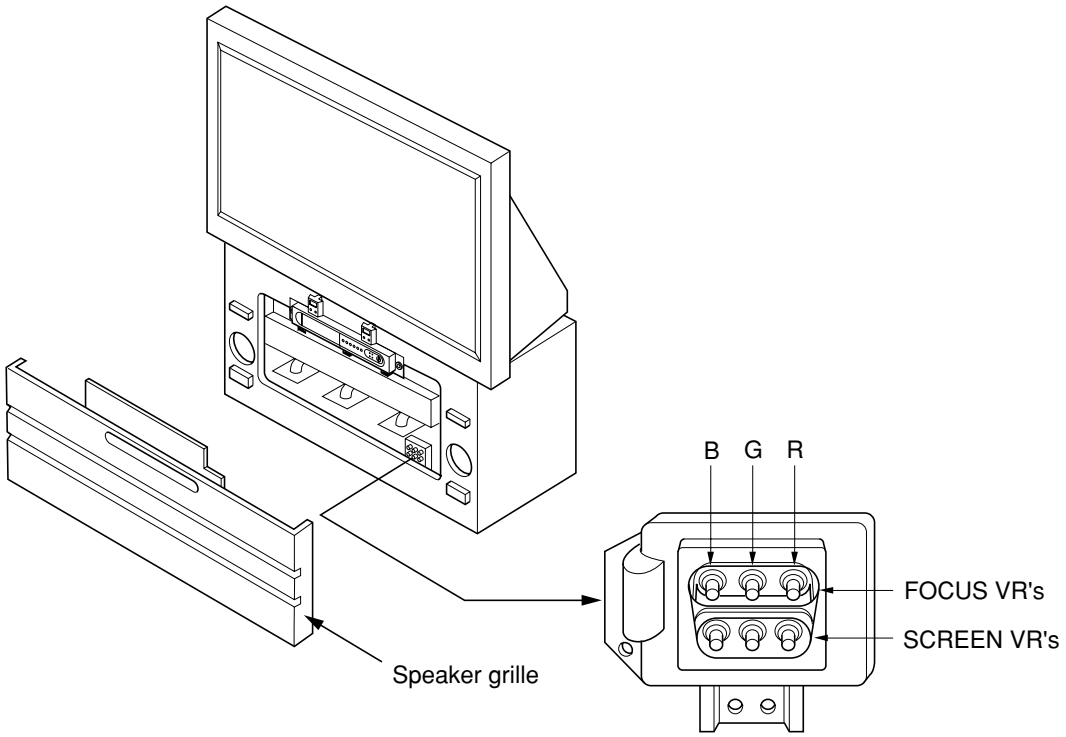

REPLACEMENT OF HIGH VOLTAGE CABLE

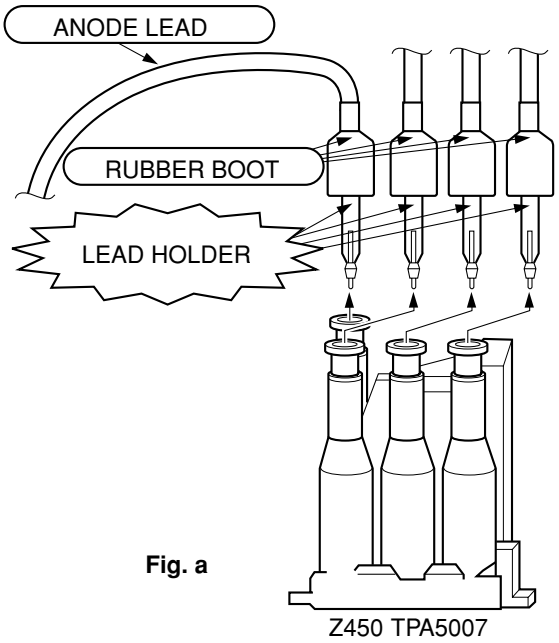

Fig. a

1. When replacing Anode Lead or Anode Cap with new one, remove Lead Holder from old lead as shown in figure below, and put it on new lead. Do not throw away Lead Holder.

NOTE : THE LEAD HOLDER IS ATTACHED TO TPA5007 (Z450), BUT IS NOT ATTACHED TO ANODE LEAD AND ANODE CAP. RUBBER BOOT IS ATTACHED TO ANODE LEAD AND ANODE CAP.

2. Detaching Lead Holder

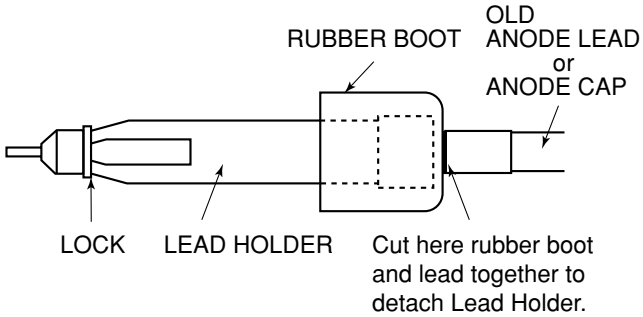

Fig. b

WARNING: BEFORE SERVICING THIS CHASSIS, READ THE "X-RAY RADIATION PRECAUTION", "SAFETY PRECAUTION" AND "PRODUCT SAFETY NOTICE" ON PAGE 3 OF THIS MANUAL.

SERVICE POSITION

In order to assure the performance, processed wires shall be replaced after the repair work.
Work procedures are as follows:

1. Remove the back board.
2. Remove lead wires.
3. Draw out the chassis.
4. Rest the chassis against the back cabinet, chassis as shown bellow.

After repair work finished, replace it in the opposite procedure.

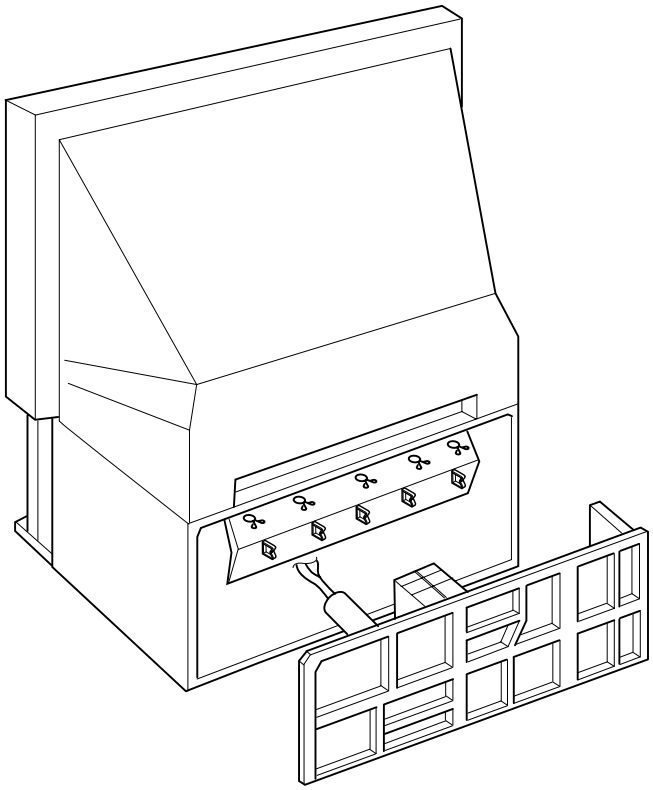

SERVICE MODE

1. ENTERING TO SERVICE MODE

1) Press 🔇 button once on Remote Control.
2) Press 🔇 button again to keep pressing.
3) While pressing the 🔇 button, press MENU button on TV set.

(Service mode display)

2. DISPLAYING THE ADJUSTMENT MENU

1) Press MENU button on TV.

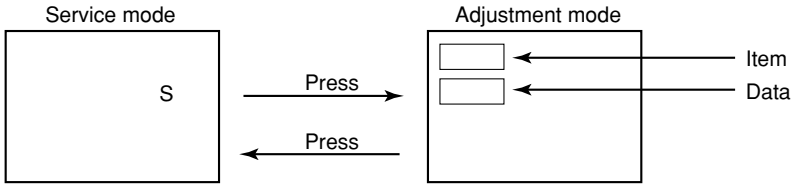

3. KEY FUNCTION IN THE SERVICE MODE

The following key entry during display of adjustment menu provides special functions.

Screen adjustment mode ON/OFF:	-/-- button (on Remote)
Test signal selection :	button (on Remote)
Selection of the adjustment items :	Channel ▲/▼ (on TV or Remote)
Change of the data value :	Volume +/– (on TV or Remote)
Adjustment menu mode ON/OFF :	MENU button (on TV)
Initialization of the memory (QA02) :	CALL + Channel button on TV (▲)
Reset the count of operating protect circuit to “00”:	CALL + Channel button on TV (▼)
“RCUT” selection :	1 button
“GCUT” selection :	2 button
“BCUT” selection :	3 button
“SCNT” selection :	4 button
“COLP” selection :	5 button – – – – – Color thickness correction
“TNTC” selection :	6 button
Convergence adj :	YELLOW button
Self diagnostic display ON/OFF :	9 button

note: Displayed differently as shown below, depending on the setting of the receiving color system.
COLP (PAL)
COLC (NTSC)
COLS (SECAM)

CAUTION : Never try to perform initialization unless you have changed the memory IC.

4. SELECTING THE ADJUSTING ITEMS

1) Every pressing of CHANNEL ▲ button in the service mode changes the adjustment items in the order of table-2. (▼ button for reverse order)

Refer to table-2 for preset data of adjustment mode.
(See SETTING & ADJUSTING DATA on page 32)

5. ADJUSTING THE DATA

1) Pressing of VOLUME ◿ +/– button will change the value of data in the range from 00H to FFH. The variable range depends on the adjusting item.

6. EXIT FROM SERVICE MODE

1) Pressing POWER button to turn off the TV once.

■ INITIALIZATION OF MEMORY DATA OF QA02

After replacing QA02, the following initialization is required.

1. Enter the service mode, then select any register item.
2. Press and hold the CALL button on the Remote, then press the CHANNEL ▲ button on the TV. The initialization of QA02 has been complated.
3. Check the picture carefully. If necessary, adjust any adjustment item above.
   Perform “Auto search Memory” on the owner’s manual.

CAUTION: Never attempt to initialize the data unless QA02 has been replaced.

7. TEST SIGNAL SELECTION

1) Every pressing of ⊖ button on the Remote Control changes the built-in test patterns on screen as described below in SERVICE MODE.

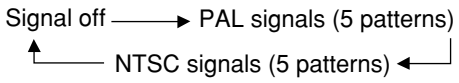

Signals	Picture
• Red raster • Green raster • Blue raster • All White	
• Black cross-hatch	

* The signals marked with ▒ are not usable to display in the Test signal for some model.

8. SELF DIAGNOSTIC FUNCTION

1) Press “9” button on Remote Control during display of adjustment menu in the service mode.
   The diagnosis will begin to check if interface among IC’s are executed properly.
2) During diagnosis, the following displays are shown.

```
<SELF CHECK>

① 2300****
② TIME      : 000000
③ POWER     : 00
④ BUS CONT  : OK
⑤ BLOCK     : UV V1 V2 V3 V4
```

① Part number of microcomputer (QA01)
② Total hour of turn the TV on. (Unit: H)
③ Operation number of protecting circuit ----“00” is normal.
When indication is other than “00”, overcurrent apts to flow, and circuit parts may possibly be damaged.
④ BUS CONT ----“OK” is normal.
When indication shows “Q ○○○ NG”, the device with the number may possibly be damaged.
⑤ BLOCK
UV : TV reception mode
V1 : VIDEO 1 input mode (⊖1)
V2 : VIDEO 2 input mode (⊖2)
V3 : VIDEO 3 input mode
V4 : VIDEO 4 input mode

Indicated color of mode now selected : Green and Red
Indicated color of other modes : Black

Green : Normal
Red : The microcomputer operates to provide judgement of no video signal. The red color is still indicated though the signal is input, failure may exist in input signal line including QV01.

NOTE: (1) In case that "on timer" indicator is blinking with interval of 0.5 seconds; it means protecting circuit (Current limiter) is operating, and circuit components may possibly be damaged. Check related components.
(2) In case that "on timer" indicator is blinking with interval of 1 second; Protecting circuit does not operate, but a part of Bus line does not operate normally. Check Bus line.

* The items marked with ▒ are not usable to display in the SELF DIAGNOSTIC FUCTION for some model.

DESIGN MODE

1. ENTERING TO DESIGN MODE

1) Select the Service mode. 2) While pressing CALL button on Remote and press MENU button on TV. 3) Press MENU button on TV.

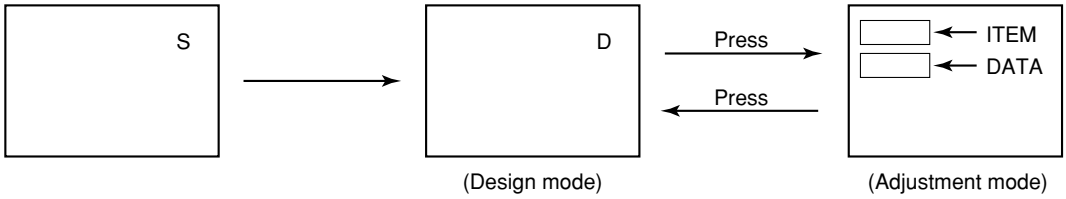

When QA02 is initialized, items “OPT0”, “OPT1” and "OPT2" of DESIGN MODE are set to the data of the representative model of this chassis family.
Therefore, because ON-SCREEN specification remains in the state of the representative of model. This model is required to reset the data of items “OPT0”, “OPT1” and "OPT2".

2. SELECTING THE ADJUSTING ITEMS

Every pressing of CHANNEL ▼ button in the design mode changes the adjustment items in the order of table-3. (▲ button for reverse order)

Refer to table-3 for data of design mode.
(See SETTING & ADJUSTING DATA on page 32)

3. ADJUSTING THE DATA

Pressing of VOLUME ▲ or ▼ button will change the value of data.

ELECTRICAL ADJUSTMENT

ITEM	ADJUSTMENT PROCEDURE
WIDTH (WID) (Picture size wide)	1. Call up the adjustment mode display, then select the item **WID**. 2. Press the VOLUME ▼ button to get the picture so the left or right edges of raster begins to lack. 3. Press the VOLUME ▲ button to advance the data by 11 steps. Note : Check the horizontal picture position is correct.
HEIGHT (HIT) (Picture size wide)	1. Call up the adjustment mode display, then select the item **HIT**. 2. Press the VOLUME ▼ button to get the picture so the top or bottom of raster begins to lack. 3. Press the VOLUME ▲ button to advance the data by 9 steps. Note : Check the vertical picture position is correct.
WHITE BALANCE (RCUT) (GCUT) (BCUT) (RDRV) (BDRV)	Black and White pattern 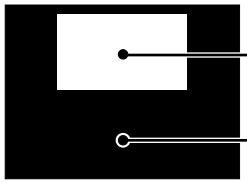 High light area Adjust "RDRV" or "BDRV" to be white. Low light area Fine adjust "RCUT", "GCUT" or "BCUT" to be black. 1. Set user control to reset position. (CONTRAST → Max BRIGHTNESS, COLOR, TINT → Center.) 2. Call up the adjustment mode display, then select the item RCUT. 3. Adjust the data of items **RCUT**, **GCUT**, and **BCUT** to "40H". 4. Press the -/-- (⇄) button on Remote. (Y-MUTE : ON) 5. Gradually rotate R, G and B screen volume of FOCUS PAC clockwise or counterclockwise until the raster appears slightly on the CRT through the each lens, and leave them. (Lookin to the lens in order to check the raster.) 6. Press the -/-- (⇄) button on Remote. (Return to Normal Picture) 7. Press the ⊖ button on Remote, and select the Black and White pattern. 8. Adjust the data of items **RCUT**, **GCUT** and **BCUT** for proper white-balanced picture in low light area. 9. Adjust the data of items **RDRV** and **BDRV** for proper white-balanced picture in high light area. 10. Check the white balance in both low and high light areas. If necessary, perform again steps from 8 to 9.

Items	Names	Settings	Input signals	Measuring points	Adjusting methods	Adjusting standards
SCNT	Sub-contrast	Picture mode 1 Audio system: I Wide mode	Sub-bright signal (PAL-I signal)	TP46B SIGNAL unit	1) Adjust amplitude from the pedestal level up to the white peak	2.3 ± 0.1Vpp
BRTC	Sub-bright center	Picture mode 1 Wide mode	Sub-bright signal	Screen adjustment	1) Adjust the number of black collapsed lines of sub-bright signals 2) Adjust after adjusting W/B, SCNT	4 ± 1.5 lines
COLP	Sub-color center PAL	Picture mode 1 Wide mode	Sub-bright signal (PAL)	TP46B SIGNAL unit	1) Adjust the amplitude of the color bar 2) Adjust the P-P value of the upper half	1.25 ± 0.1Vpp
COLS	Sub-color center SECAM	Picture mode 1 Wide mode	SECAM color bar	TP46B SIGNAL unit	1) Adjust the amplitude of the color bar (Apply picture mute at the time of adjustment) 2) Adjust the P-P value of the upper half	1.75 ± 0.1Vop
SRY	SECAM R-Y Black level		SECAM color bar	TP02 SIGNAL unit	1) Adjust so that the level of black and white signal part can be aligned with the level of H.BLK	0 ± 10mV
SBY	SECAM R-Y Black level		SECAM color bar	TP01 SIGNAL unit	1) Adjust so that the level of black and white signal part can be aligned with the level of H.BLK	0 ± 10mV
Screen adjustment	Screen	Factory screen adjusting mode		CRT tubular screen	1) Darken the environment as much as possible 2) Set to factory-set screen adjusting MODE (Y mute, DRV.CUT=40H) 3) Directly observe the surface of Cathode Ray Tube and adjust the screen VR to the point that starts lighting 4) Make above-mentioned adjustments for each tube of G, R, and B.	Point that starts lighting
Focus adjustment	Focus	Dynamic mode CINEMA mode	Retma signal (PAL-I) Crosshatch signal	Screen adjustment	1) Adjust to the best position by repeating electrical focus and optical focus adjustments 2) Use the jig and shade the CRT except the axes under adjustment 3) Make above-mentioned adjustments for each tube of G, R, and B.	For details, refer to [focus adjusting method] introduced in the next page.
RDRV BDRV	Bright part W/B			Screen adjustment	1) Adjust the color temperature of the bright part (103cd/m^2).	8750k-0.002uv
RCUT BCUT	Dark part W/B			Screen adjustment	1) Adjust the color temperature of the dark part (17cd/m^2)	8750k-0.002uv
Voltage measure-ment at vertical midpoint	Midpoint voltage	Dynamic mode Wide mode	Phillips Pattern	Between TP-V and TP-G	1) Connect a digital voltmeter between TP-V and TP-G and adjust it to 10 ± 10mV by VCEN data TP-V ● — + Digital voltmeter TP-G ● — −	10 ± 10mV

Adjustment items	Adjusting methods
Focus adjustment	(Conditions) - User adjustment: Dynamic mode, Cinema mode - To be performed after centering magnet adjustment. - Signal : Lens: R .... Retma Pattern (PAL) G .... Crosshatch (PAL) B .... Crosshatch (PAL) Electrical focus : R .... Retma Pattern (PAL) G .... Crosshatch (PAL) B .... RetmaPattern (PAL) (Adjustment) 1. Common item 1) Make coarse adjustments in advance on the lens focus and electrical focus of each R, G, and B tube. 2. G adjustment 1) Set to the G monochrome by lens cap. 2) Receive the image of crosshatch. 3) Adjust the G electric focus. Adjust the G electrical focus by the focus volume of focus block (Z410) so that the screen center will come to optimum focus. (Although the G electrical focus is to be adjusted to allow the scanning lines in the center of the screen to be seen most clealy, if G alignment and astigmatism are inferior with the appearance of vertical and horizontal flares in the center of and around the screen and if the lines become thicker, adjust to the best point observing the entire screen.) 4) Adjust the G lens focus. (Details on43PH and 42W are mentioned in the next page) Keep an eye on the center of the crosshatch pattern and adjust so that the screen center will become clear. As a rough guide to decrease unevenness, adjust so that red flares on both sides of the crosshatch line will come to 1mm in thickness. 5) Repeat 3, 4, and attempt to further improve the focus quality.
The items of G lens adjustment mentioned in 4) are applicable to 50PH, 61PH, 50W, and 57W, and regarding the G lens adjustment for 43PH and 42W, apply the methods mentioned in the next page.	

Adjustment items	Adjusting methods
Focus adjustment The method mentioned left is applied to the focus adjustment on the G lens adjustment of 43PH, 42W.The details of G lens adjustment for 50PH,61PH, 50W, and 57W are described in the previous page.	4) Adjust the G lens focus. (Applicable only to 43PH, 42W) Watch the horizon of the left and right both ends of the screen (the range of circle with 100mm diameter shown in the following sketch), make optimum adjustments on the G lens focus, and check that the focus balance on the right and left is satisfactory. (Balance check of left-and-right G lens focus) (1) Adjust the G lens focus best by crosshatch of the left end (or the right end). (2) Check the focus of the right end (or the left end). If the balance of the left and right lens focus (flare) is different, part it and adjust to the medium quality. Check the environment and confirm that the focus quality (including flare) is within a tolerable range. 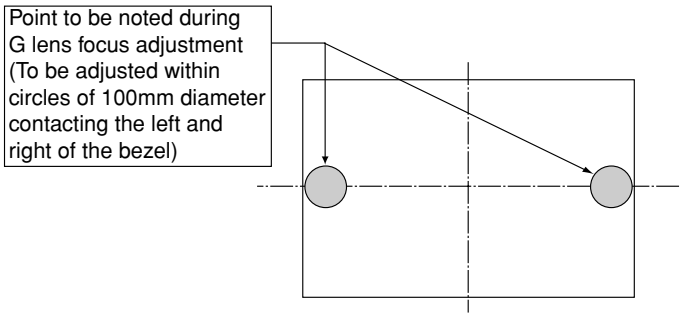 Concerning items 1), 2), 3), and 5) of G adjustment, these are common to the ones on the previous page. 3. R adjustment 1) Set to the R monochrome by lens cap. 2) Receive the image of Retma pattern. 3) Adjust the R electrical focus. Adjust by focus volume of the focus block (Z410) so that the screen center will come to optimum focus. 4) Adjust the R lens focus. Adjust so that the screen center will become the best. 5) Repeat 3, 4, and attempt to further improve the focus quality.

Adjustment items	Adjusting methods
Focus adjustment	4. B adjustment 1) Set to the B monochrome by lens cap. 2) Receive the image of Retma pattern. 3) Adjust the B electrical focus. Adjust by focus volume of the focus block (Z410) so that the screen center will come to optimum focus (point where the brightness gets minimized) 4) Receive the image of crosshatch pattern. 5) Adjust the B lens focus. Pay attention to the border of the blue line and the black (background) in the vicinity of the screen center. First of all, make coarse adjustments of the lens, and move the lens adjusting screw to the right at the point being considered as the best focus. Then, the lines of the border become clear. Check and confirm under the circumstance that a flare appears. On the contrary, if the lens adjusting screw is moved to the left from the situation, the flare will disappear, and at this point you will find a point from which the borderline itself begins to go out of focus. Adjust to the very point where the focus begins to go out.

Items	Names	Settings	Input signals	Measuring points	Adjusting methods	Adjusting standards
Adjustment of screen position		Dynamic mode	Phillips Pattern (PAL-I)	Screen adjustment	1) Adjust the vertical and horizontal screen positions using the centering magnet so that the center cross mark of the dummy screen and the cross mark of the Phillips pattern can overlap precisely. This will be carried out individually for the tubes of R, G, and B. (Caution) Do not move HPOS and VPOS data.	Below 7mm in diameter
HIT VLIN	Vertical amplitude adjustment PAL WIDE	Dynamic mode WIDE mode	Phillips Pattern (PAL-I)	Screen adjustment	1) Set the screen size to WIDE 2) Shorten the vertical amplitude by HIT data in the beginning until up-and-down flags appear on the screen. 3) Subsequently, lengthen the vertical amplitude by HIT data until either up or down flag end is aligned with the screen end. (Overlap the vertical center of the pattern with the center mark of the screen)	Both the upper flag and the lower one are to come in contact
HIT	Vertical amplitude adjustment PAL SUPERLIVE	Dynamic mode SUPERLIVE mode	Phillips Pattern (PAL-I)	Screen adjustment	1) Set the screen size to SUPERLIVE 2) Adjust by HIT so that the upper and lower areas inside the circle of Phillips pattern may come in contact with the screen end. (Caution) Do not make VLIN adjustments	The inside of he circle is to contact the screen end
HIT	Vertical amplitude adjustment PAL CINEMA	Dynamic mode CINEMA mode mode	Phillips Pattern (PAL-I)	Screen adjustment	1) Set the screen size to CINEMA 2) Adjust the register marks on the top and bottom of Phillips pattern. (Caution) Do not touch the centering magnet	
HIT	Vertical amplitude adjustment PAL SUBTITLE	Dynamic mode SUBTITLE mode	Phillips Pattern (PAL-I)	Screen adjustment	1) Set the screen size to SUBTITLE 2) Adjust the register marks on the top and bottom of Phillips pattern. (Caution) Do not touch the centering magnet	
WID	Horizontal amplitude adjustment PAL WIDE	Dynamic mode WIDE mode	Phillips Pattern (PAL-I)	Screen adjustment	1) Set the screen size to WIDE. 2) Adjust so that the number of register marks of flags on the left and right of Phillips pattern will come to 8 in total when added. 3) Adjustment of the user center position is to be 0.	Addition of the left and right 8 ± 1 marks

Items	Names	Settings	Input signals	Measuring points	Adjusting methods	Adjusting standards
NHIT NVLI	Vertical amplitude adjustment NTSC WIDE	Dynamic mode WIDE mode	Monoscope signal NTSC LEADER-435B	Screen adjustment	1) Set the screen size to WIDE. 2) The upper first one on the screen is to be hidden by the mask.	
NHIT	Vertical amplitude adjustment NTSC SUPERLIVE	Dynamic mode SUPERLIVE mode	Monoscope signals NTSC LEADER-435B	Screen adjustment	1) Set the screen size to SUPERLIVE mode. 2) Adjust so that the upper third one on the screen will come in contact with the screen end 3) Do not adjust NVLI.	
NHIT	Vertical amplitude adjustment NTSC CINEMA	Dynamic mode CINEMA mode	Monoscope signals NTSC LEADER-435B	Screen adjustment	1) Set the screen size to CINEMA. 2) Adjust so that the 30 characters on the up-and-down and left-and-right ends can come in contact with the screen end.	
NHIT	Vertical amplitude adjustment NTSC SUBTITLE	Dynamic mode SUBTITLE mode	Monoscope signal NTSC LEADER-435B	Screen adjustment	1) Set the screen size to SUBTITLE. 2) Adjust so that the upper fifth one on the screen will come in contact with the screen end. 3) Do not adjust NVLI.	
NWID	Horizontal amplitude adjustment NTSC WIDE	Dynamic mode WIDE mode	Monoscope signal NTSC LEADER-435B	Screen adjustment	1) Set the screen size to WIDE. 2) Adjust the 25th left register mark to the left screen end.	

CONVERGENCE ADJUSTMENT

1. SCREEN ADJUSTMENT

The adjustment is carried out on four screens; 4 : 3 and 16 : 9 screens in both PAL and NTSC modes. When making the adjustments, feed an external signal to make an synchronization.

Note:

The convergence circuit is a circuit to eliminate screen distortion and can not make a drastic correction such as to correct entire screen size. An excessive correction may actuate the protection circuit. So a care will be necessary.

Before proceeding to the adjustment for each screen, always perform the adjustments for vertical size (HIT) and horizontal size (WID) with the main deflection data changed.

Order of the adjusting screens is PAL 4 : 3 → PAL 16 : 9 → NTSC 4 : 3 → NTSC 16 : 9.

The menu order is 1~7 .... when the vertical sync is 50 Hz. (In this case, item 8~12 are not displayed)

The menu order is 8~12 .... when the vertical sync is 60 Hz. (In this case, item 1~7 are not displayed)

1-1. Entering the Adjustment Menu

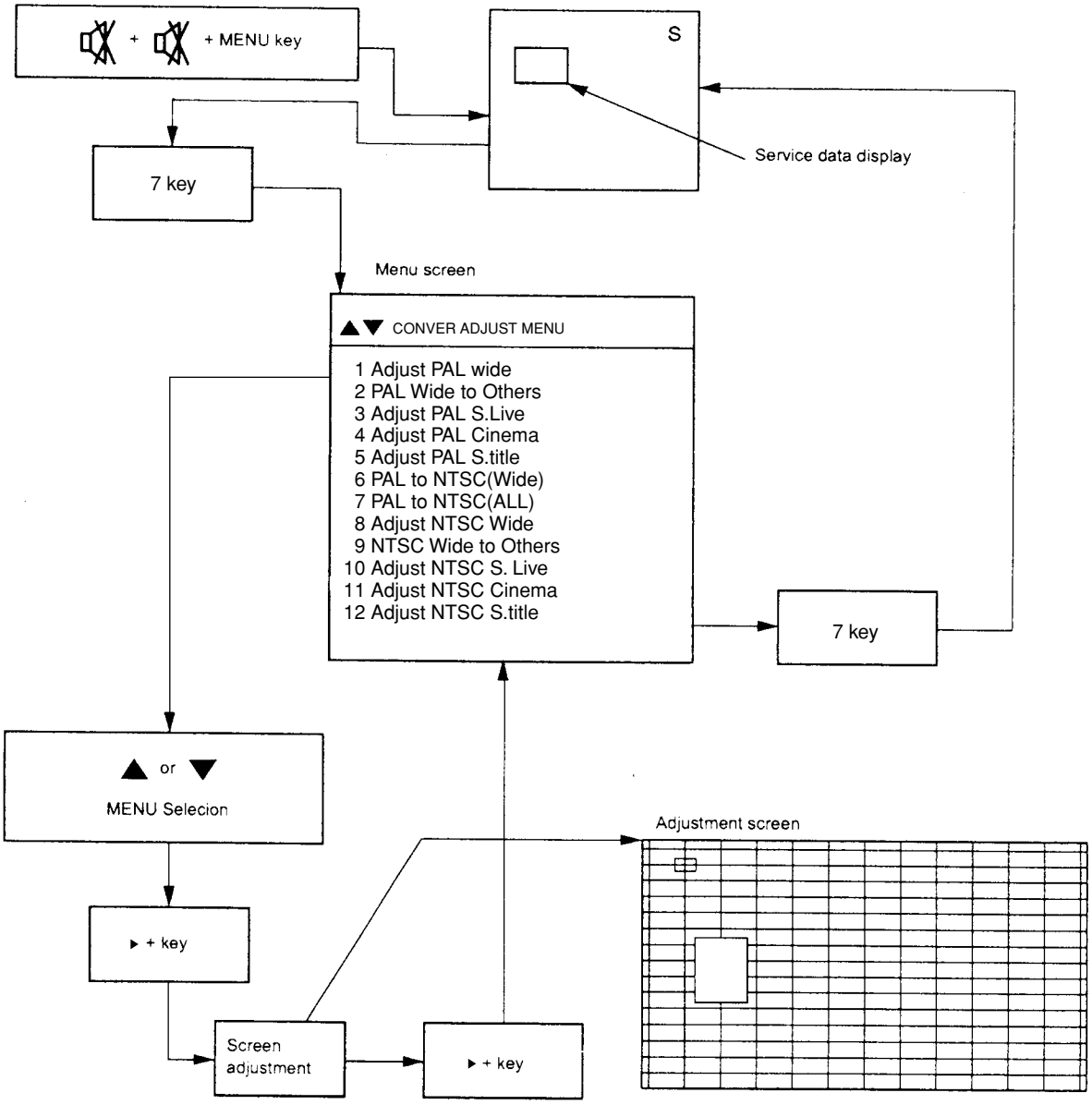

Fig. 1

1-2. Remote Control Key

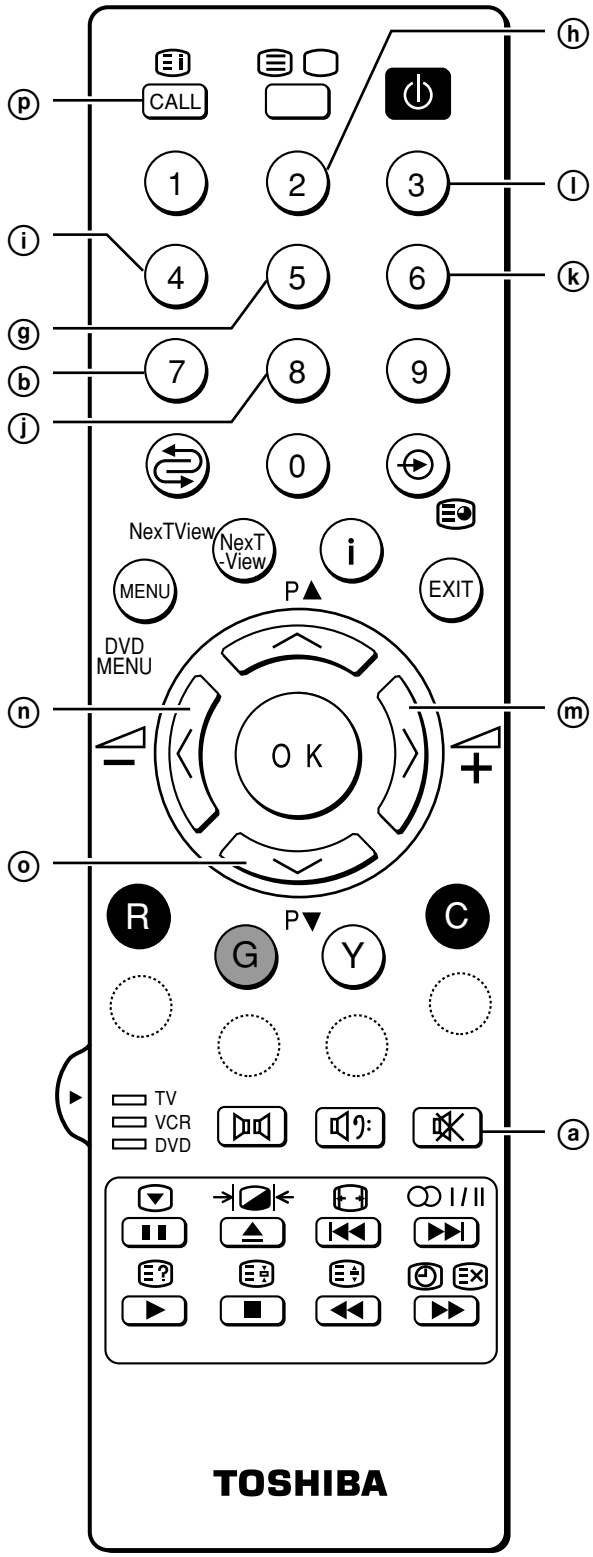

ⓐ 🔇 key ..... Push this key twice and the set console menu key to enter the service mode.

ⓑ 7 key ..... Push 7 key to enter and cancel the convergence menu.

ⓖ 5 key ..... Cursor shift / data change mode change-over.

ⓗ 2 key ..... Cursor up / adjusting point up.

ⓘ 4 key ..... Cursor left / adjusting point left

ⓙ 8 key ..... Cursor down / adjusting point down

ⓚ 6 key ..... Cursor right / adjusting point right

ⓛ 3 key ..... Cursor colour change (Adjusting colour selection).

ⓜ ▶ key ..... Execution key on convergence menu.

ⓝ ▲ key ..... Up key on convergence menu.

ⓞ ▼ key ..... Down key on convergence menu.

Fig. 2

1-3. Adjusting Screen

1) Adjusting menu

NO	Item	Description
1	Adjust PAL Wide	Used for manual adjustment of the Wide/4:3 screen in the PAL mode. Returns to the original screen data screen before data conversion, explained below.
2	PAL Wide to others	Automatically saves approximate supplementary data for the other PAL screens based on the PAL Wide/4:3 screen data. First, the PAL Wide/4:3 screen data are converted to Super Live and the values are saved. Next, the data are converted to Cinema and the values are saved. Finally, the data are converted to Subtitle and the values are saved, and then the operation ends. Manually check the other screen modes as described below and make corrections if distortion, etc., is present. Please be aware that all PAL screens are re-adjusted when this menu is selected and executed.
3	Adjust PAL S.Live	Used for manual adjustment of the PAL Super Live screen. Select this mode for Super Live screen color matching and distortion adjustment. Use the specified dimensions when adjusting.
4	Adjust PAL Cinema	Used for manual adjustment of the PAL Cinema screen. Select this mode for Cinema screen color matching and distortion adjustment. Use the specified dimensions when adjusting.
5	Adjust PAL S.title	Used for manual adjustment of the PAL S.title screen. Select this mode for S.title screen color matching and distortion adjustment. Use the specified dimensions when adjusting.
6	PAL to NTSC (Wide)	PAL Wide/4:3 screen data is calculated, converted to NTSC Wide/4:3 approximate data and saved. To assure accurate adjustments, select the manual mode explained below and check, then apply color matching and distortion adjustments.
7	PAL to NTSC (All)	Data for all PAL screens is converted to approximate data for the NTSC screens and saved. To assure accurate adjustments, select the manual mode explained below and check, then apply color matching and distortion adjustments.
8	Adjust NTSC Wide	Used for manual adjustment of the NTSC Wide/4:3 screen. Select this mode for Wide/4:3 screen color matching and distortion adjustment. Use the specified dimensions when adjusting.
9	NTSC Wide to others	Approximate supplementary data for the other NTSC screens is automatically saved based on the NTSC Wide/4:3 screen data. First, the NTSC Wide/4:3 screen data are converted to Super Live and the values are saved. Next, the data are converted to Cinema and the values are saved. Finally, the data are converted to Subtitle and the values are saved, and then the operation ends. Manually check the other screen modes as described below and make corrections if distortion, etc., is present. Please be aware that all NTSC screens are re-adjusted when this menu is selected and executed.

NO	Item	Description
10	Adjust NTSC S.Live	Used for manual adjustment of the NTSC Super Live screen. Select this mode for Super Live screen color matching and distortion adjustment. Use the specified dimensions when adjusting.
11	Adjust NTSC Cinema	Used for manual adjustment of the NTSC Cinema screen. Select this mode for Cinema screen color matching and distortion adjustment. Use the specified dimensions when adjusting.
12	Adjust NTSC S.title	Used for manual adjustment of the NTSC Subtitle screen. Select this mode for Subtitle screen color matching and distortion adjustment. Use the specified dimensions when adjusting.

2) Adjustment Screen

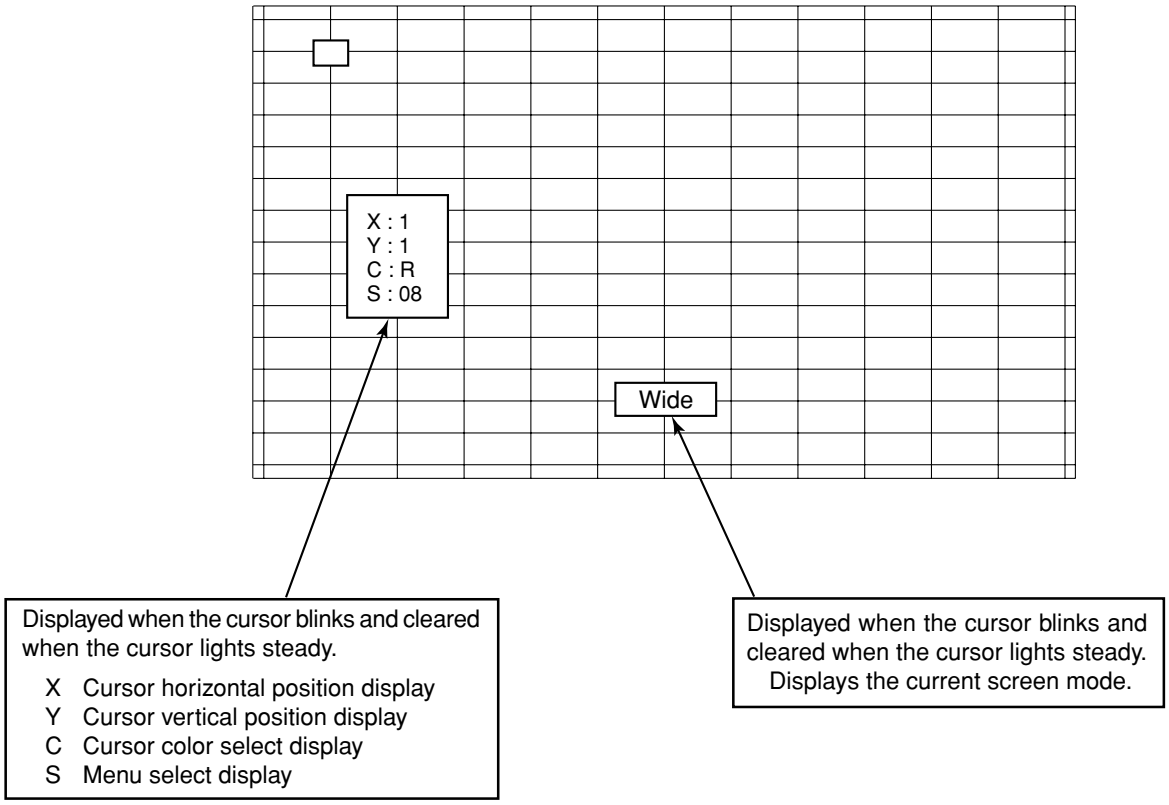

3) Adjustment Sequence

When the initial screen opens, X = 1, Y = 1, C = R and S = [Select Menu] are displayed as the defaults. The cursor can now be moved up, down, left and right using the (2), (8), (4) and (6) keys of the remote control. Select the desired adjustment and press the (5) key; the cursor will light steady and the screen display will be cleared. Again press the (2), (8), (4) and (6) keys of the remote control to adjust the shape of the screen. When adjustment has been completed, press the (+) key to return to the Adjustment Menu. When all of the screen adjustments have been completed, turn off the main power supply of the set to reset the menu.

2. Case Study

In many cases, color matching problems can be solved by returning the HIT and WID data for main deflection to the initial adjustment values. Convergence cannot be re-adjusted in the following cases.

2-1 When the CRT has been replaced

Main deflection re-adjustment and color matching are necessary when the CRT has been replaced. Use the following procedure.

1. Replace the blue and red CRTs.
2. Perform the blue and red yoke horizontal adjustments in relation to the green CRT. Press the yokes and speed modulation coils + alignments onto the CRTs and fasten after making sure that there are no gaps.
3. Adjust the blue and red alignments (refer to the detailed alignment adjustment item).
4. Use centering magnets to center the blue and red CRTs in relation to the green CRT.
5. Adjust the main deflection HIT and WID data, using the most accurate location in relation to the green as data.
6. Use convergence to match the colors for each screen. Green will not work at this time.
7. When the convergence adjustments have been completed for all screens, then replace the green CRT.

Repeat the procedures in steps 2 - 5 for the green CRT but this time use convergence to match the colors using red and blue as reference.

2-2 When replacing the convergence unit

Generally, all of the screens must be re-adjusted when the convergence unit is replaced, but the process can be greatly shortened by using the following method.

1. Replace the memory (Q711, Q712, Q713) of the new unit with the memory (Q711, Q712, Q713) of the defective unit. This makes it possible to quickly reproduce the previous screen status when installed in the set.
2. Install the new unit with the old memory in the set and turn on the power. The entire screen will move linearly in either the vertical or horizontal direction.
3. Use centering magnets to re-adjust the green, red and blue centers.
4. There is possibility of color mismatching or differences in screen size when the various screens are checked. In such case, adjust the main deflection and apply a slight amount of convergence color matching.

2-3 When none of the above cases apply (rare case)

An unexpected situation or major operational error, etc., could be considered but it is recommended that all screens be matched starting from the beginning. If the initial positions of the centering magnets are unknown, disconnect the connectors for the convergence sub-yoke outputs one at a time, adjust the CRT centering and then start the following adjustments.

1. Make sure that there is plenty of room for the static cross convergence to be moved left, right, up and down. If sufficient space is not available, move to an appropriate location and then re-adjust the centering.
2. Enter the convergence adjustment mode and call out the menu. (Leave the PAL signal connected.)
3. Select 1. Adjust PAL Wide and adjust the PAL mode Wide/4:3 screen manually in accordance with the dimension diagram.
4. When the Wide/4:3 screen adjustment has been completed, return to the Main Menu and select 2. PAL Wide to others.
   The screen will change automatically and the Wide, Cinema and Subtitle screens will be created automatically.
5. Next, select 3. Adjust PAL S.Live and mainly adjust in the horizontal direction in accordance with the dimension diagram.
6. Next, select 4. Adjust PAL Cinema and fine adjust to remove any Cinema screen distortion.
7. Next, select 5. Adjust PAL Subtitle and fine adjust to remove any Subtitle screen distortion.
8. Next, select 7. PAL to NTSC (ALL), then calculate and copy the data for all PAL screens in the NTSC mode. At this time, the calculations and screen shape changes will be performed automatically and the NTSC screen data corresponding to the PAL screens will be transferred.
9. Select in sequence 8. Adjust NTSC Wide, 10. Adjust NTSC S.Live, 11. Adjust NTSC Cinema and 12. Adjust NTSC Subtitle, check the respective NTSC screen modes and, if necessary, adjust for any distortion.

All of the screens can be adjusted with the above process but make every effort not to change the factory data unless absolutely necessary. Try not to change the convergence data any more than necessary.

3 Screen adjustment dimensions

3-1 WIDE/4:3 (PAL mode)

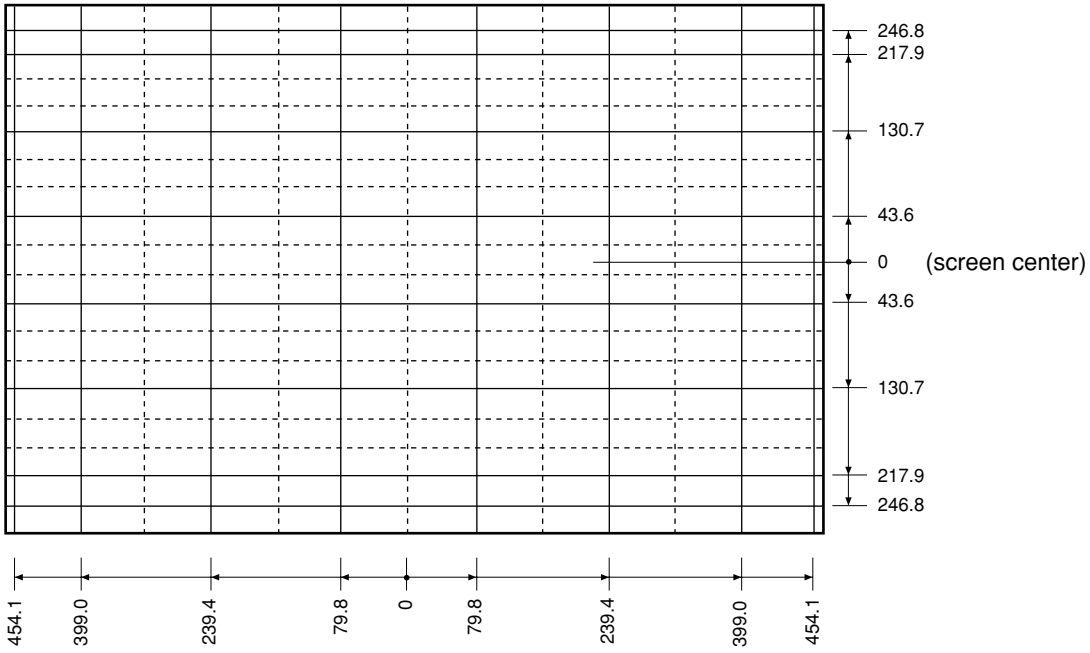

3-2 Super Wide (PAL mode)

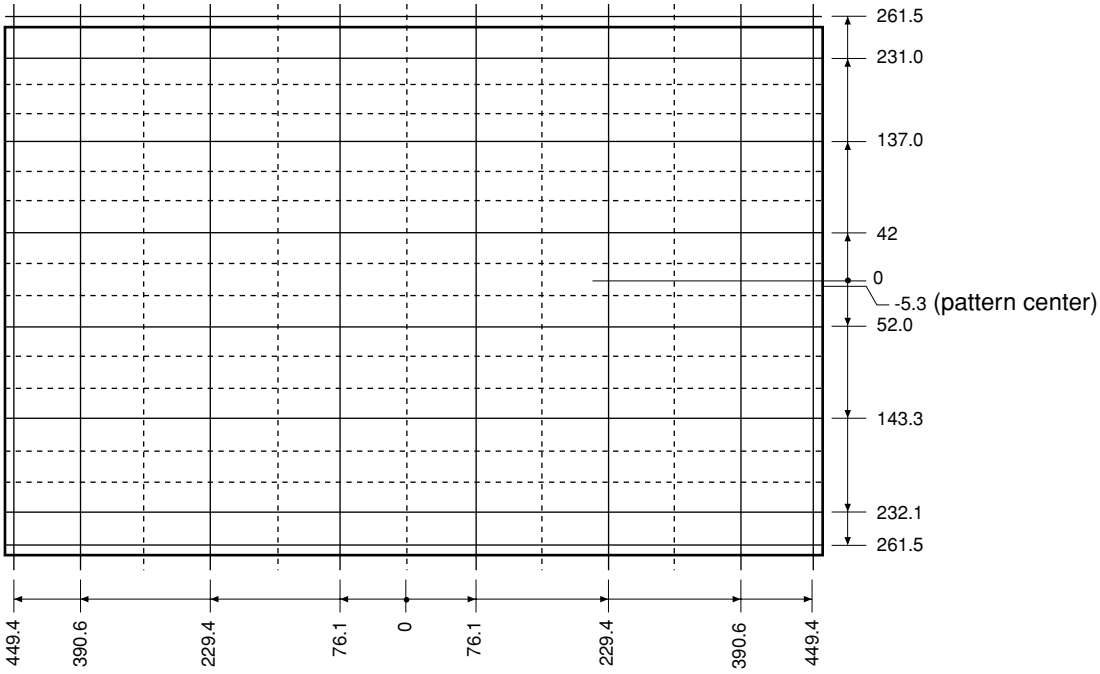

Caution: Do not perform the VLIN adjustment.

3-3 Cinema (PAL mode)

Note: The cursor will move outside the screen limits in the Cinema mode; therefore, be careful to consider the position of the cursor displayed on the screen when making adjustments.

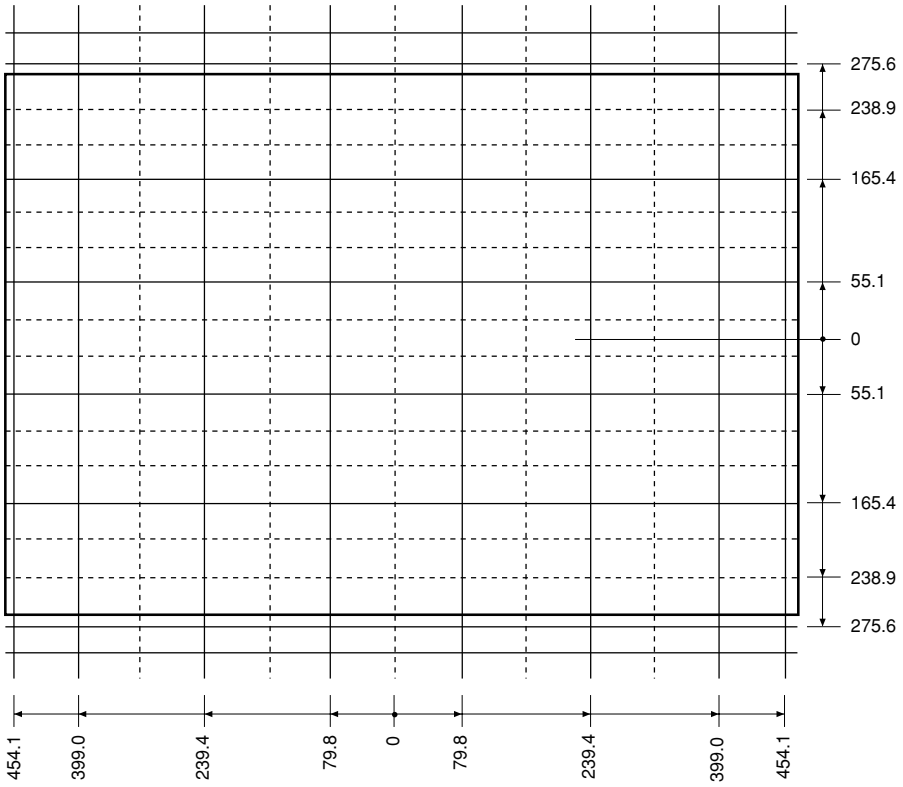

3-4 Subtitle (PAL mode)

Note: The cursor will move outside the screen limits in the Subtitle mode; therefore, be careful to consider the position of the cursor displayed on the screen when making adjustments.

Note: Please be aware that the Subtitle screen convergence pattern center is located at the center of the screen but the image center is located approximately 13mm above that.

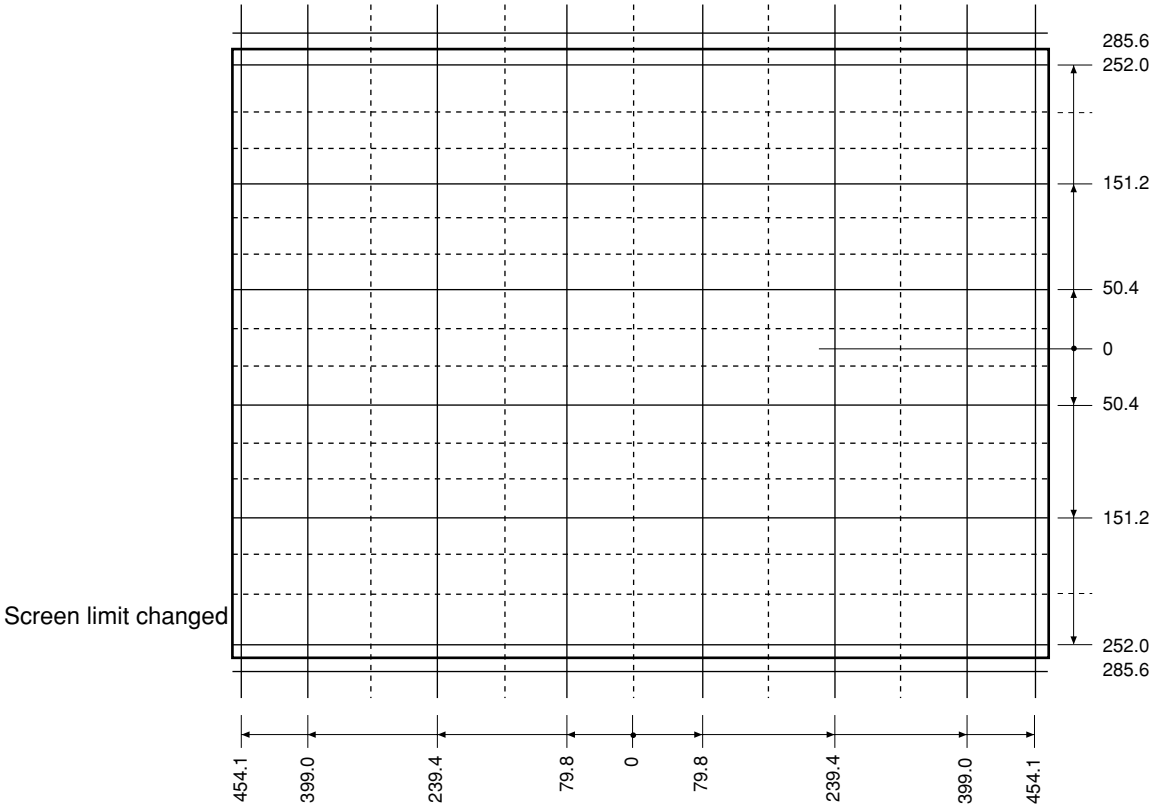

3-5 WIDE/4:3 (NTSC mode)

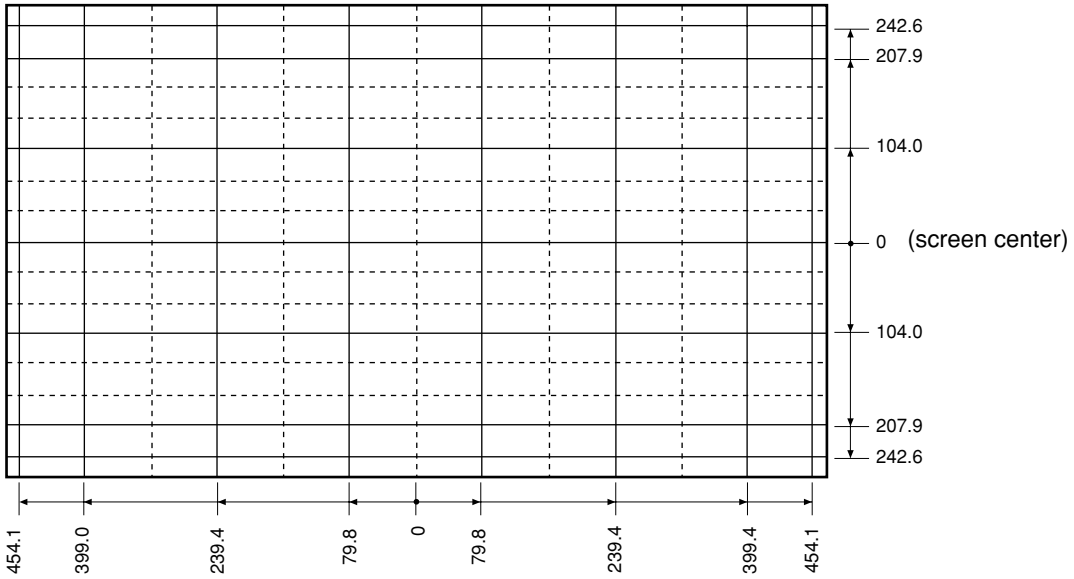

3-6 Super Live (NTSC mode)

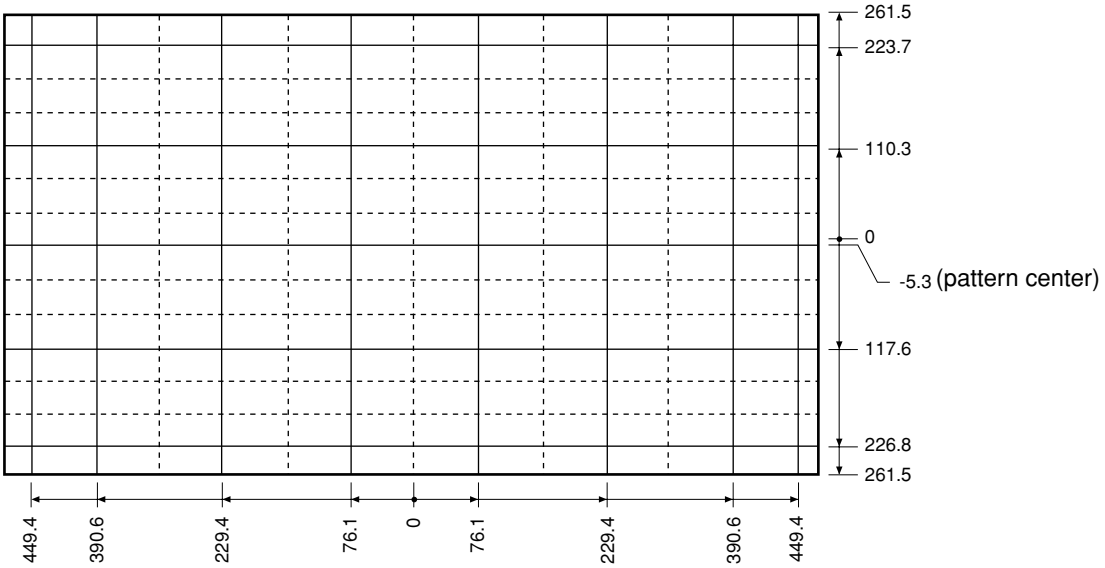

Caution: Do not perform the VLIN adjustment.

3-7 Cinema (NTSC mode)

Note: The cursor will move outside the screen limits in the Cinema mode; therefore, be careful to consider the position of the cursor displayed on the screen when making adjustments.

Note: Please be aware that the Cinema screen convergence pattern center is located at the center of the screen but the image center is located approximately 13mm above that.

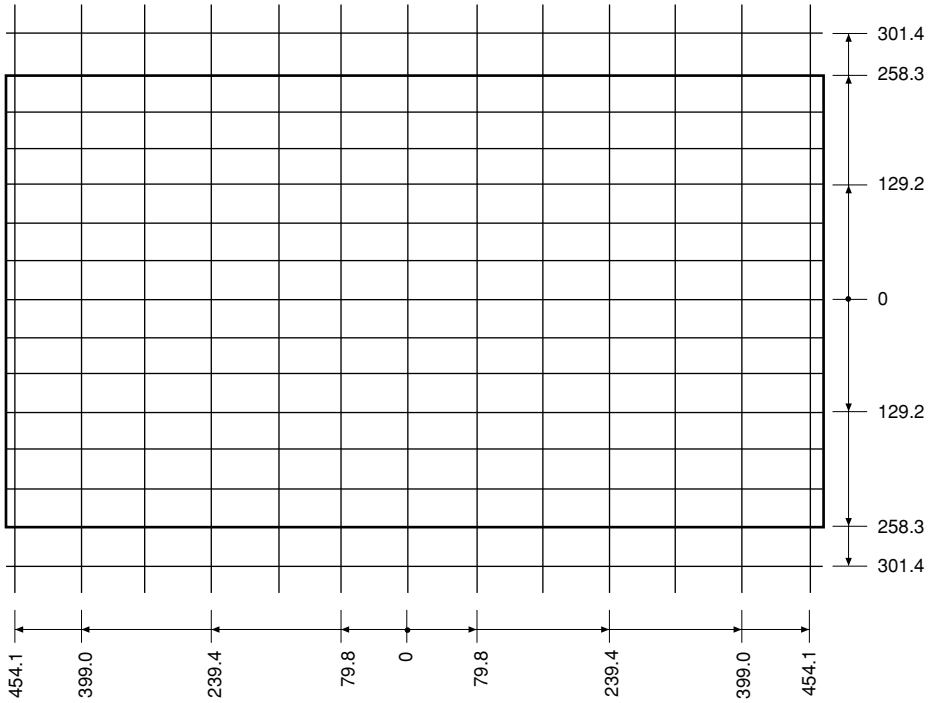

3-8 Subtitle (NTSC mode)

Note: The cursor will move outside the screen limits in the Subtitle mode; therefore, be careful to consider the position of the cursor displayed on the screen when making adjustments.

Note: Please be aware that the Subtitle screen convergence pattern center is located at the center of the screen but the image center is located approximately 32mm above that.

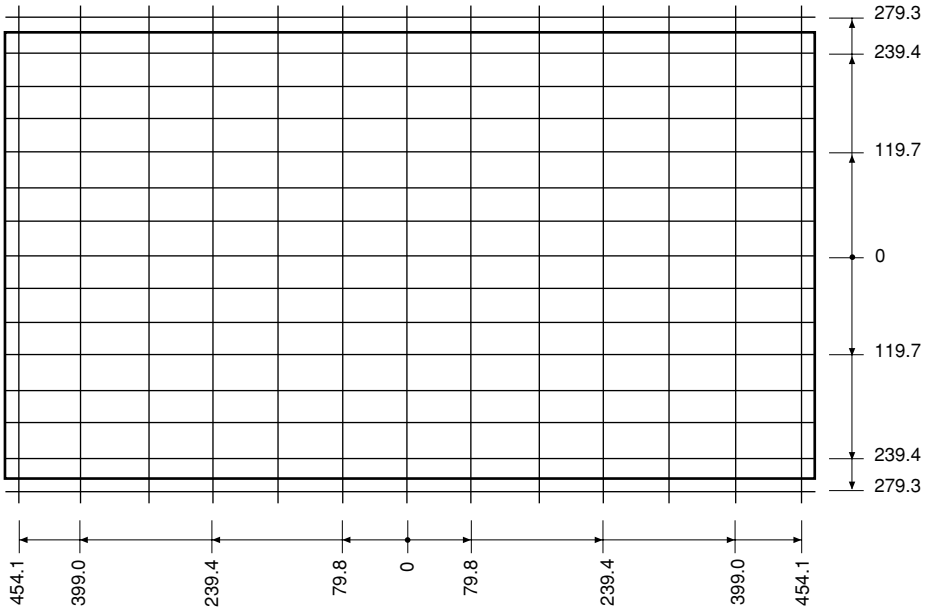

SCREEN AND MIRROR ALIGNMENTS

ASSEMBLING OF FRONT SCREEN

MOUNTING OF FRONT SCREEN

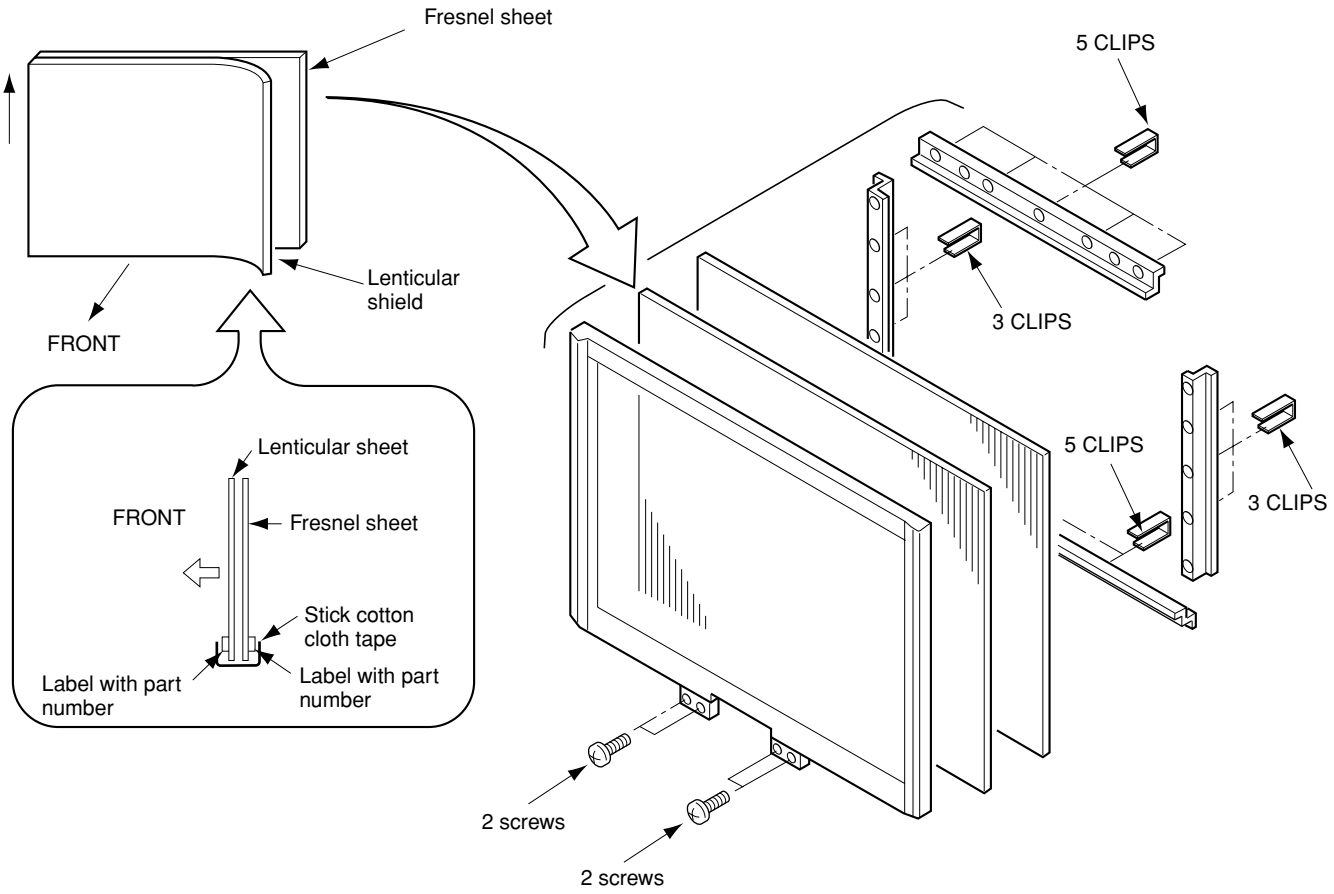

* Please refer to Mechanical Disassembly on page 33 for 42".

CAUTION : Do not hold the optical system parts (lens and mirror) with bare hand to avoid finger-prints on the surface of those parts.

HOW TO CLEAN LENS AND MIRROR

1. Be sure to remove sand dust with an air brush, etc.
2. When it is stained slightly, breathe upon it and wipe away with the specified cleaning cloth.
   For other stains than the above, wipe the stains away with the specified cloth into which a cleaning liquid has been soaked.

Cleaning liquid..... **LENS LUSTER** (Manufactured by Edmund Scientific Co.), etc.

HOW TO CLEAN SCREEN

When cleaning the screen, use a soft cloth so as not to damage the screen.

1. Wipe the screen with a dry cloth to remove moisture on the screen.

Note : Absolutely do not use detergent, water, alcohol, benzine, thinner, etc. for cleaning in order not to wipe away the black print on the surface.

CIRCUIT CHECKS

HIGH VOLTAGE CHECK

CAUTION: There is no HIGH VOLTAGE ADJUSTMENT on this chassis. Checking should be done following the steps below.

1. Connect an accurate high voltage meter to the anode of the picture tube.
2. Turn on the receiver. Set the BRIGHTNESS and CONTRAST to minimum (zero beam current).
3. High voltage must be measured below (B) kV.

   Refer to table-1 for high voltage (B).
   (See SETTING & ADJUSTING DATA on page 32)
4. Vary the BRIGHTNESS to both extremes to be sure the high voltage does not exceed the limit under any conditions.

CAUTION:

When the following parts fail, check the High Voltage after replacing.

Location No.	Name	Name
T461	Flyback Trans.	TFB3089AD
C440	Capacitor	2200pF, ±3%
C443	Capacitor	4700pF, ±3%
C444	Capacitor	8200pF, ±3%
C467	Capacitor	12000pF, ±5%
C468	Capacitor	12000pF, ±5%

ANODE VOLTAGE MEASURING METHOD

CAUTION: Take extra precaution when measuring this high voltage. High voltages are also present in surrounding circuit boards (CRT DRIVE assembly, DEFLECTION assembly, and POWER SUPPLY assembly).

1. Disconnect the FBT anode cable as outlined below. Measure high voltage at the point where the cable enters the FBT.
2. Holding the rubber cover firmly, turn it counterclockwise and check that the lock has been disengaged. (See Fig. b on page 8.)
3. Determine the extent of the rubber cover before disconnecting the cable.
4. Pull straight up the anode cable to disconnect.
5. When reconnecting the cable, proceed in the reverse order.
   After reconnecting, tug on the cable to check that it is secure.

SETTING & ADJUSTING DATA

【 SAFETY INSTRUCTIONS 】

		42", 50"
HIGH VOLTAGE AT ZERO BEAM:	(A)	33.0 kV
MAX HIGH VOLTAGE:	(B)	34.5 kV
AC VOLTAGE	(C)	220~240 V

Table-1

【 SERVICE MODE 】

ADJUSTING ITEMS AND DATAS IN THE SERVICE MODE:

Item	Adjustment	Reference data
RCUT	R CUTOFF (B/W)	40H
GCUT	G CUTOFF (B/W)	40H
BCUT	B CUTOFF (B/W)	40H
RDRV	R DRIVE	40H
BDRV	B DRIVE	40H
BRTC	SUB BRIGHT CEN	80H
COLP	SUB COLOR CEN PAL	05H
COLS	SUB COLOR CEN SECAM	08H
SCNT	SUB CONTRAST	08H
SRY	SECAM R-Y	07H
SBY	SECAM B-Y	04H
HPOS	50Hz H-POSITION	0EH

Item	Adjustment	Reference data
VPOS	V-POSITION	06H
HIT	HEIGHT	51H
VLIN	V-LINEARITY	11H
VSC	V-S CORRECTION	08H
VPS	V-SHIFT	15H
WID	PICTURE WIDTH	23H
PARA	E-W PARABOLA	05H
CNR	E-W CORNER	00H
TRAP	TRAPEZIUM	0BH
VFC	V-F CORRECTION	0FH
VCEN	V-POSITION (RASTER)	60H
OPT3	DESTINATION SEL	00H/01H

Table-2

【 DESIGN MODE 】

ADJUSTING ITEMS AND DATAS IN THE DESIGN MODE:

Item	Name of adjustment	Preset Data	42", 50"	Remarks
OPT0	OPTION 0	B0H	B0H	
OPT1	OPTION 1	7EH	7EH	
OPT2	OPTION 2	A0H	A0H	
OPT4	OPTION 4	01H	01H	

Table-3

LOCATION OF CONTROLS

(Representative: 42WH18P)

Front

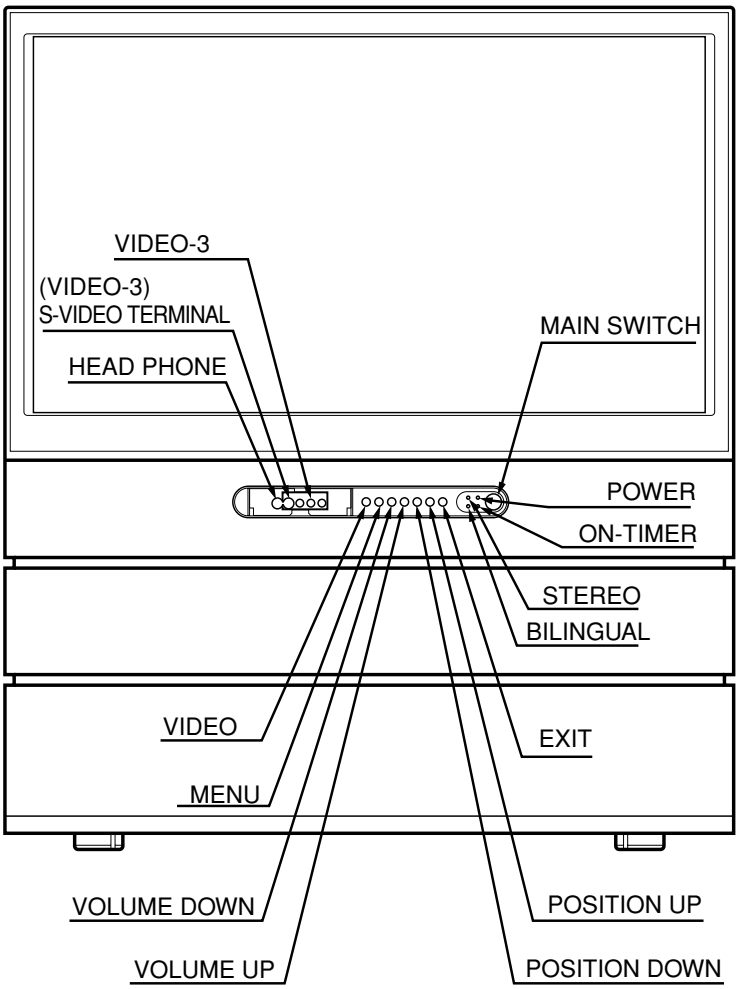

Back

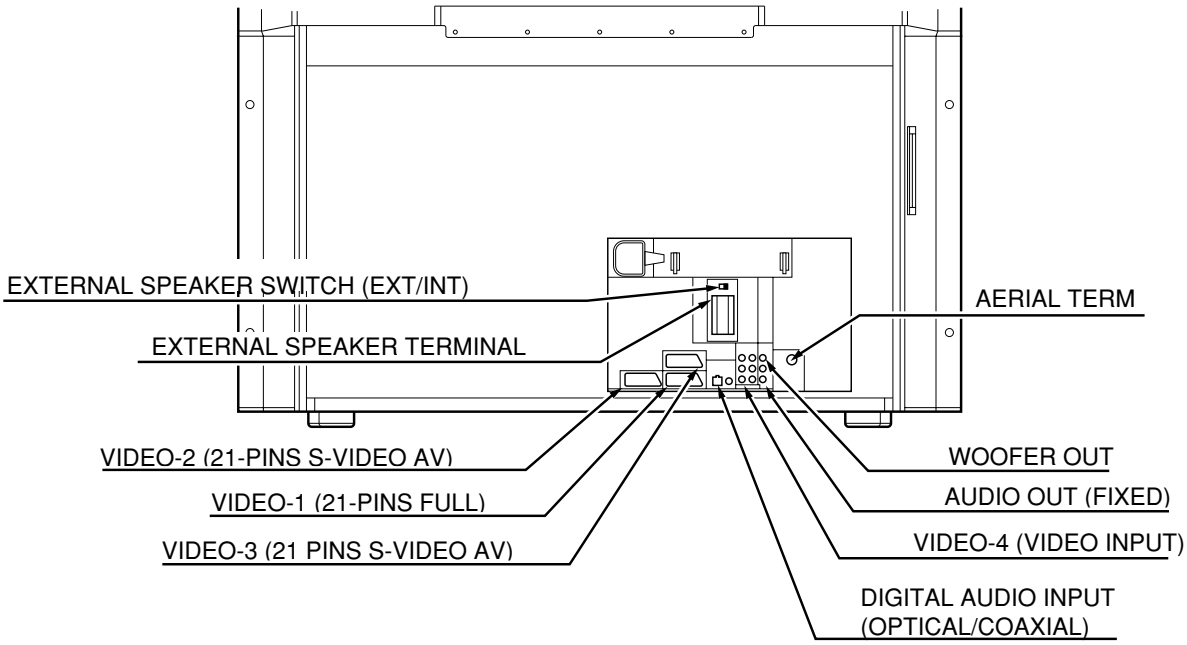

Remote Controller

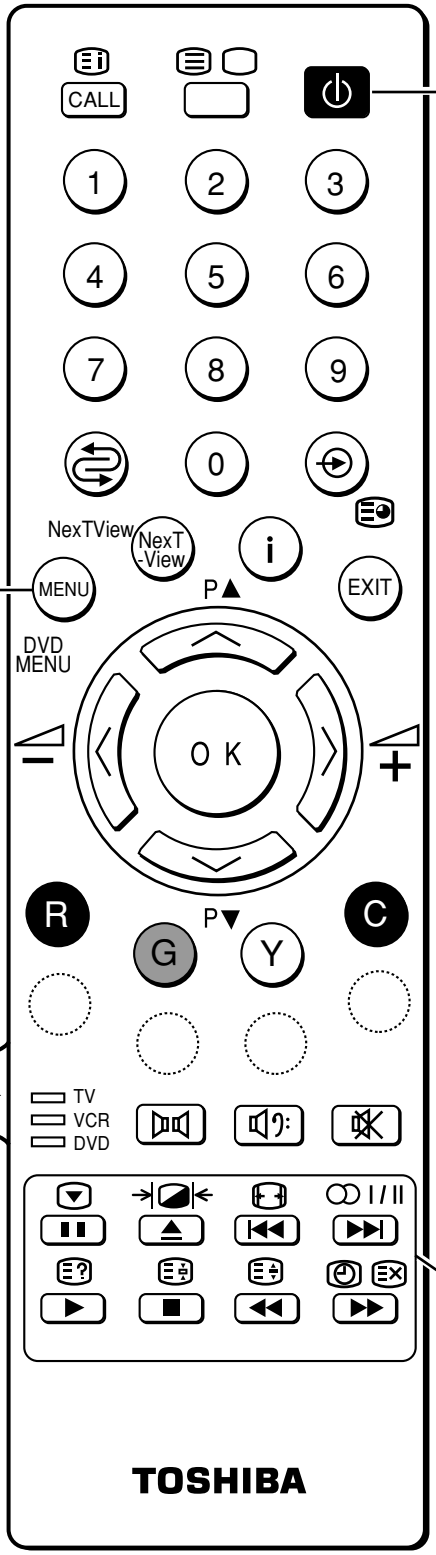

Power Key: TV, VCR, DVD

MENU & Cursor: TV, DVD

Switched
TV Mode
VCR Mode
DVD Mode

1. TEXT Sub Function
   <HOLD, REVEAL, F-T-B, TIME/TXCL, SUB PAGE>
   ---------- Only TV mode operation

2. VCR & DVD Common
   <Power, Play, Stop, Pause, Eject,
   FF, REV, Skip - FWD, Skip - REV>

3. Key Name (by special characters)
   ---------- Power ON - Stanby
   ---------- TEXT INDEX
   ---------- TEXT / TV
   ---------- VIDEO INPUT
   ---------- SELECTABLE PICTURE
   ---------- MUTE
   ---------- VOLUME +, –
   ▲P▼ ---------- POSITION(CH.) Up/Down
   ---------- Size
   ---------- STILL PICTURE
   ---------- Sub Woofer
   ---------- SURROUND
   I/II ---------- Stereo Bilingual
   ---------- Previous Ch.
   i ---------- INFO.

CIRCUIT BLOCK DIAGRAM

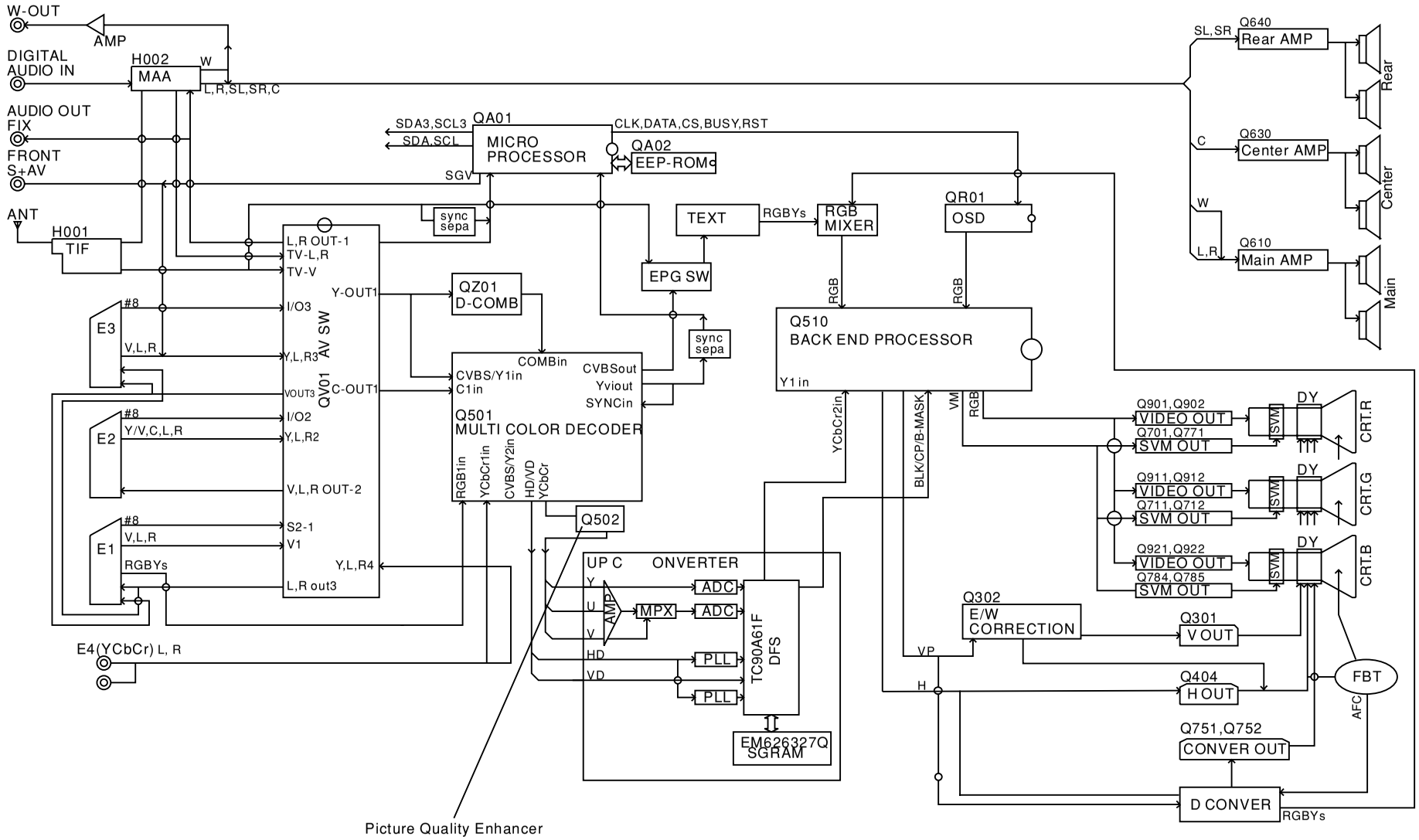

2001 Euro PJTV CIRCUIT BLOCK DIAGRAM

MECHANICAL DISASSEMBLY (For 42WH18P)

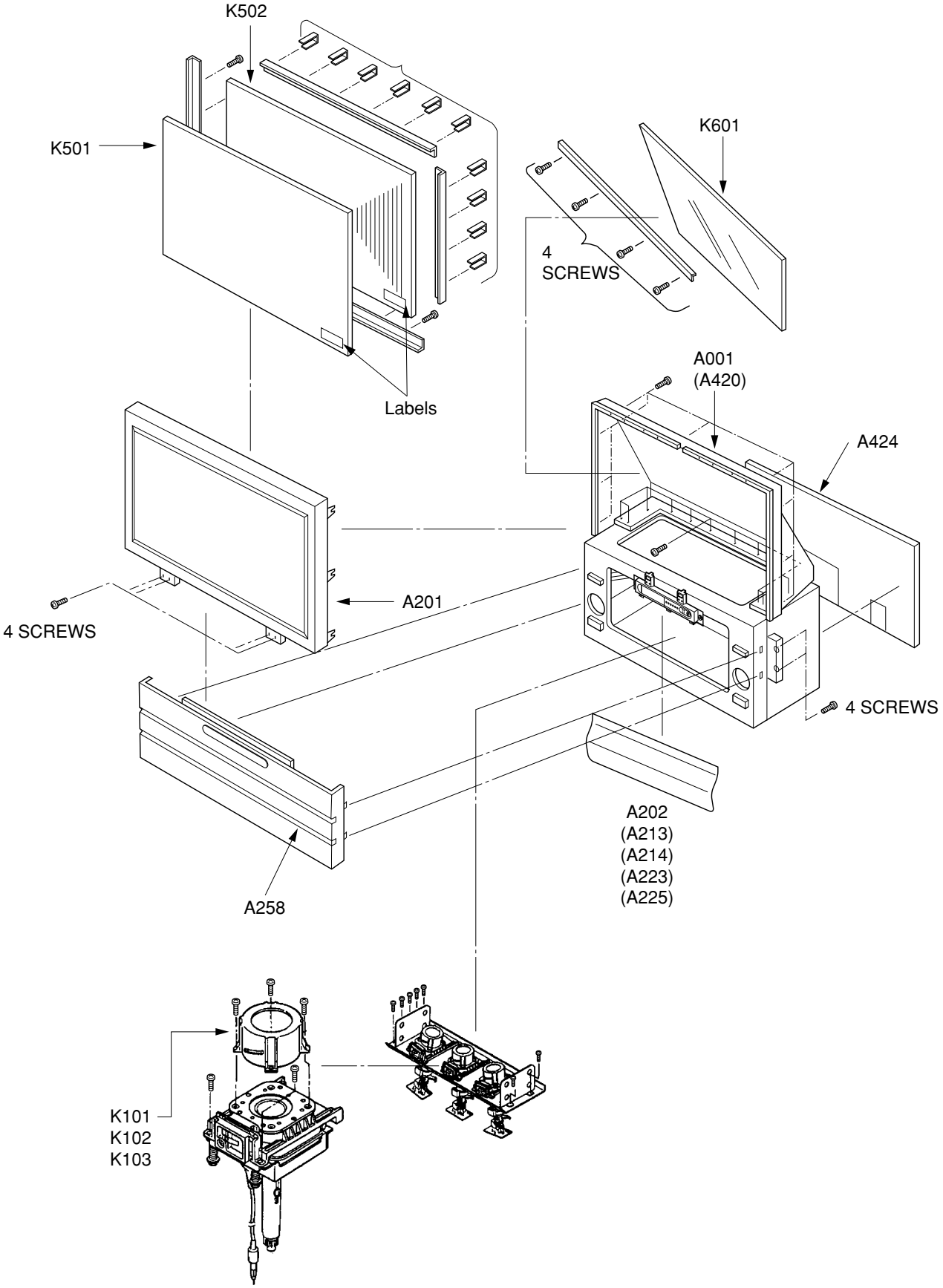

MECHANICAL DISASSEMBLY (For 50WH18P)

1 Speaker Grille Removal

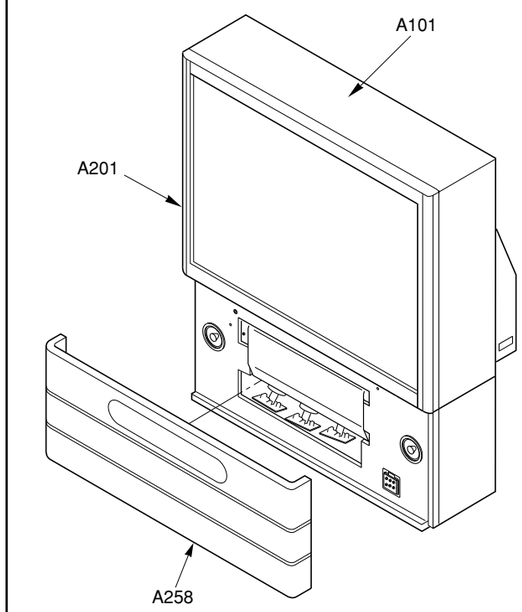

2 Control Panel Removal

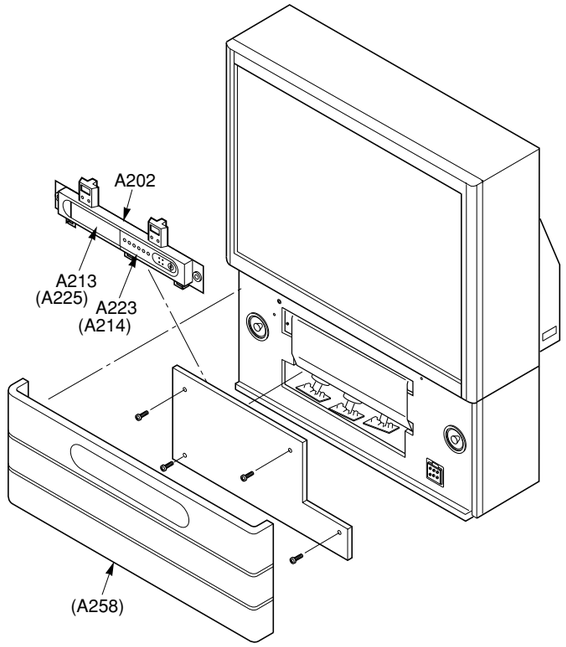

3 Front Mask Removal

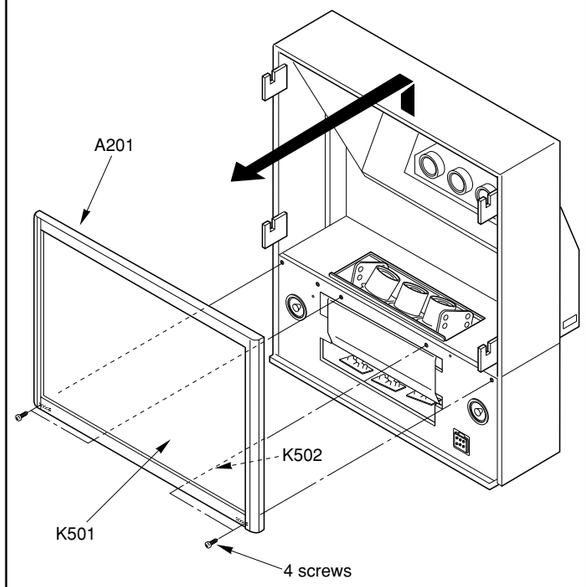

4 Mask Removal

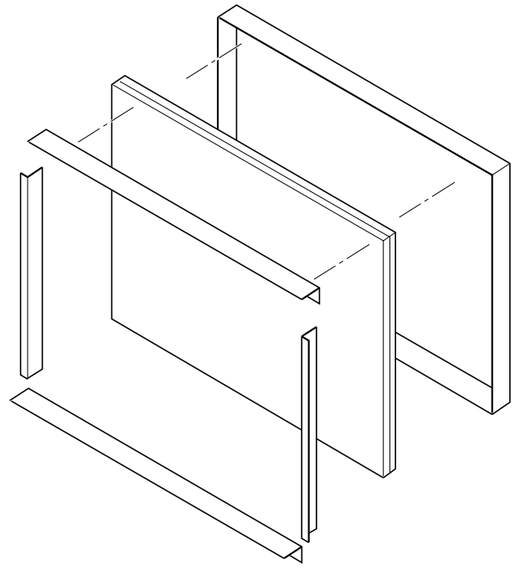

5 Shield Plate, Lens Removal

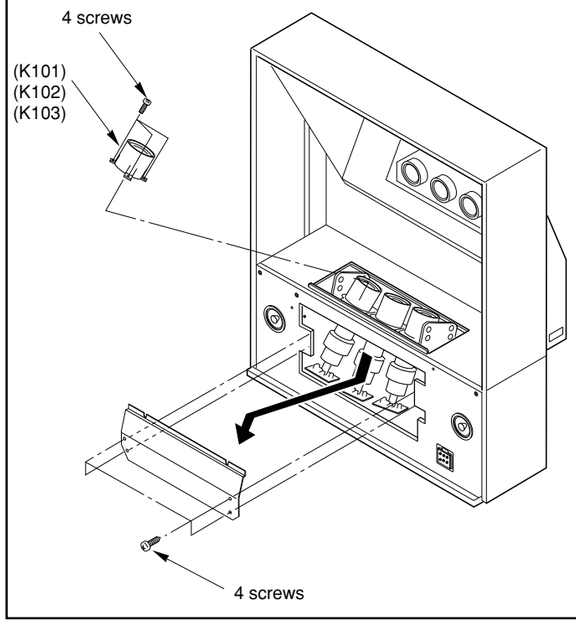

6 Mirror Removal

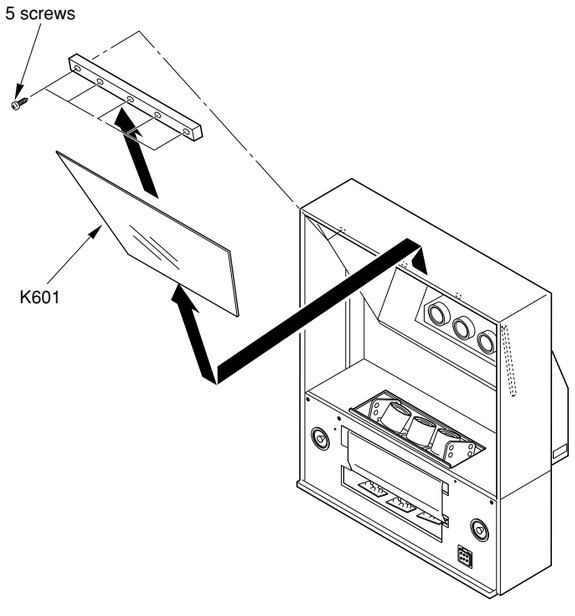

7 Back Board Removal

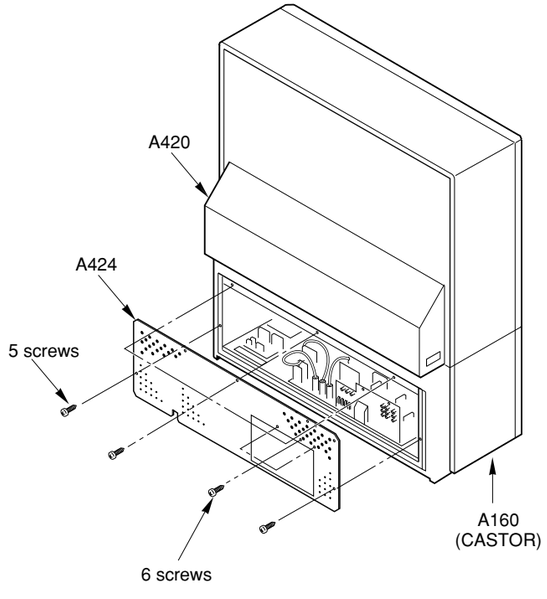

THIS PAGE IS
INTENTIONALLY LEFT
BLANK.

CHASSIS AND CABINET REPLACEMENT PARTS LIST

WARNING: BEFORE SERVICING THIS CHASSIS, READ THE "X-RAY RADIATION PRECAUTION", "SAFETY PRECAUTION" AND "PRODUCT SAFETY NOTICE" ON PAGE 3 OF THIS MANUAL.

CAUTION: The international hazard symbols "⚠" in the schematic diagram and the parts list designate components which have special characteristics important for safety and should be replaced only with types identical to those in the original circuit or specified in the parts list. The mounting position of replacements is to be identical with originals. Before replacing any of these components, read carefully the PRODUCT SAFETY NOTICE . Do not degrade the safety of the receiver through improper servicing.

NOTICE:
- *The part number must be used when ordering parts, in order to assist in processing, be sure to include the Model number and Description.*
- *The PC board assembly with ∗ mark is no longer available after the end of the production.*

ABBREVIATIONS:

Capacitors	CD	:	Ceramic Disk	PF	:	Plastic Film	EL	: Electrolytic
Resistors	CF	:	Carbon Film	CC	:	Carbon Composition	MF	: Metal Film
	OMF	:	Oxide Metal Film	VR	:	Variable Resistor	FR	: Fusible Resistor

(All CD and PF capacitors are ±5%, 50V and all resistors, ±5%, 1/6W unless otherwise noted.)

Models : 42WH18P/50WH18P

Location No.	Parts No.	Description
CAPACITORS		
C102	24793221	ELECTROLYTIC CE04G 10V 220UF M
C105	24109102	CERAMIC CHIP CK73B 50V 1000PF K
C106	24797100	ELECTROLYTIC, 50V 10UF M
C108	24793221	ELECTROLYTIC CE04G 10V 220UF M
C109	24109103	CERAMIC CHIP CK73B 50V 10000PF K
C115	24109103	CERAMIC CHIP CK73B 50V 10000PF K
C160	24567224	PLASTIC FILM, 50V 0.22UF J
C170	24567104	PLASTIC FILM, 50V 0.1UF J
C205	24797229	ELECTROLYTIC, 50V 2.2UF M
C206	24794100	ELECTROLYTIC, 16V 10UF M
C215	24105101	CERAMIC CHIP, 50V CH 100PF J
C301	24092730	CERAMIC CHIP, 16V 0.1UF K
C302	24092753	CERAMIC CHIP CK73B 10V 220NF K
C303	24503049	MT PLA CAP 63V 0.47UF J
C304	24092730	CERAMIC CHIP, 16V 0.1UF K
C305	24092730	CERAMIC CHIP, 16V 0.1UF K
C306	24105102	CERAMIC CHIP CC73CH 25V 1000PF J
C307	24567105	PLASTIC FILM, 50V 1 UF J
C308	24092733	CERAMIC CHIP CK73B 50V 22000PF K
C309	24105102	CERAMIC CHIP CC73CH 25V 1000PF J
C310	24669101	ELECTROLYTIC, 50V 100UF M 3A
C311	24109103	CERAMIC CHIP CK73B 50V 10000PF K
C312	24105102	CERAMIC CHIP CC73CH 25V 1000PF J
C313	24666101	ELECTROLYTIC, 16V 100UF M 3A
C314	24092730	CERAMIC CHIP, 16V 0.1UF K
C315	24666102	ELECTROLYTIC, 16V 1000UF M 3A
C316	24666102	ELECTROLYTIC, 16V 1000UF M 3A
C317	24109222	CERAMIC CHIP CK73B 50V 2200PF K
C318	24109222	CERAMIC CHIP CK73B 50V 2200PF K
C319	24503049	MT PLA CAP 63V 0.47UF J
C320	24669101	ELECTROLYTIC, 50V 100UF M 3A
C321	24669101	ELECTROLYTIC, 50V 100UF M 3A
C322	24109473	CERAMIC CHIP CK73B 25V 47000PFK
C323	24109473	CERAMIC CHIP CK73B 25V 47000PFK
C324	24669101	ELECTROLYTIC, 50V 100UF M 3A
C325	24503045	MT PLA CAP 63V 0.22UF J
C326	24092730	CERAMIC CHIP, 16V 0.1UF K
C327	24092753	CERAMIC CHIP CK73B 10V 220NF K
C328	24082260	PLASTIC FILM, 100V 4700PF J
C329	24669100	ELECTROLYTIC, 50V 10UF M 3A
C330	24085946	ELEC. NONPOLAR CE04R 16V 10UF M NP 3A
C332	24669221	ELECTROLYTIC CE04Q 50V 220UF M 3A
C333	24693473	PLASTIC FILM CQ921 M 100V 0.047MF J
C334	24109471	CERAMIC CHIP CK73B 50V 470PF K
C335	24092730	CERAMIC CHIP, 16V 0.1UF K
C338	24666330	ELECTROLYTIC, 16V 33UF M 3A
C339	24667101	ELECTROLYTIC, 25V 100UF M 3A
C340	24666330	ELECTROLYTIC, 16V 33UF M 3A
C370	24669229	ELECTROLYTIC, 50V 2.2UF M 3A
C371	24092730	CERAMIC CHIP, 16V 0.1UF K
C401	24214332	CERAMIC DISK, 500V 3300PF K
C402	24214391	CERAMIC DISC, 500V B 390PF K
C403	24667220	ELECTROLYTIC, 25V 22UF M 3A
C405	24503042	MT PLA CAP 63V 0.12UF J
C412	24829823	PLASTIC FILM, 400V 82000PF J
C415	24092478	CERAMIC DISK, 2KV 470PF K
C416	24676220	ELECTROLYTIC, 100V 22UF M 3A
C417	24095716	PLASTIC FILM, 250V 1.5UF K
C423	24082756	PLASTIC FILM CF92 T 400V R33UF J (42WH18P)
C423	24082649	CF92T2G334J (50WH18P)
C425	24082647	PLASTIC FILM CF92 T 400V R27UF J
C426	24211222	CERAMIC DISC CK45B 2KV 2200PFK
C432	24567333	PLASTIC FILM, 50V 33000PF J
C440	24082938	PLASTIC FILM CF92 T 1500VH 2200PF H
C443	24082946	PLASTIC FILM, 1500VH 4700PF H
C444	24082961	PLASTIC FILM, 1500VH 8200PF H
C445	24828473	PLASTIC FILM, 200V 47000PF J
C446	24679330	ELECTROLYTIC, 250V 33UF M 3A
C448	24640908	ELECTROLYTIC, 160V 33UF M 3A LI
C449	24214221	CERAMIC DISK, 500V 220PF K
C460	24679330	ELECTROLYTIC, 250V 33UF M 3A
C464	24095900	PLASTIC FILM, 100V 3.3UF K
C465	24109103	CERAMIC CHIP CK73B 50V 10000PF K
C466	24109103	CERAMIC CHIP CK73B 50V 10000PF K
C467	24820123	PLASTIC FILM, 630V 0.012UF J

Location No.	Parts No.	Description
C468	24820123	PLASTIC FILM, 630V 0.012UF J
C470	24095900	PLASTIC FILM, 100V 3.3UF K
C481	24666101	ELECTROLYTIC, 16V 100UF M 3A
C482	24092733	CERAMIC CHIP CK73B 50V 22000PF K
C483	24092733	CERAMIC CHIP CK73B 50V 22000PF K
C484	24109102	CERAMIC CHIP CK73B 50V 1000PF K
C501	24100104	CERAMIC CHIP, 25V 100000PF Z
C502	24100104	CERAMIC CHIP, 25V 100000PF Z
C503	24794470	ELECTORLYTIC, 16V 47UF M
C504	24109103	CERAMIC CHIP CK73B 50V 10000PF K
C505	24794470	ELECTORLYTIC, 16V 47UF M
C506	24109103	CERAMIC CHIP CK73B 50V 10000PF K
C507	24100104	CERAMIC CHIP, 25V 100000PF Z
C508	24100104	CERAMIC CHIP, 25V 100000PF Z
C509	24100104	CERAMIC CHIP, 25V 100000PF Z
C510	24763221	ELECTROLYTIC, 16V 220UF M
C511	24100104	CERAMIC CHIP, 25V 100000PF Z
C512	24100104	CERAMIC CHIP, 25V 100000PF Z
C513	24109103	CERAMIC CHIP CK73B 50V 10000PF K
C514	24762221	ELECTROLYTIC, 10V 220UF M
C516	24105110	CERAMIC CHIP CC73CH 50V 11pF J
C517	24206478	ELECTROLYTIC, 50V 0.47UF M 7L 3A
C518	24105101	CERAMIC CHIP, 50V CH 100PF J
C519	24797479	ELECTROLYTIC, 50V 4.7UF M
C520	24503047	MT PLA CAP 63V 0.33UF J
C521	24092733	CERAMIC CHIP CK73B 50V 22000PF K
C522	24109103	CERAMIC CHIP CK73B 50V 10000PF K
C523	24100104	CERAMIC CHIP, 25V 100000PF Z
C524	24109103	CERAMIC CHIP CK73B 50V 10000PF K
C525	24503041	PLASTIC FILM , 63V 0.1UF J
C526	24109103	CERAMIC CHIP CK73B 50V 10000PF K
C527	24797229	ELECTROLYTIC, 50V 2.2UF M
C530	24206010	ELECTROLYTIC, 50V 1.0UF M 7L 3A
C531	24100104	CERAMIC CHIP, 25V 100000PF Z
C532	24100104	CERAMIC CHIP, 25V 100000PF Z
C533	24100104	CERAMIC CHIP, 25V 100000PF Z
C534	24100104	CERAMIC CHIP, 25V 100000PF Z
C536	24100104	CERAMIC CHIP, 25V 100000PF Z
C537	24100104	CERAMIC CHIP, 25V 100000PF Z
C540	24100104	CERAMIC CHIP, 25V 100000PF Z
C541	24100104	CERAMIC CHIP, 25V 100000PF Z
C542	24100104	CERAMIC CHIP, 25V 100000PF Z
C543	24109103	CERAMIC CHIP CK73B 50V 10000PF K
C544	24109103	CERAMIC CHIP CK73B 50V 10000PF K
C545	24109103	CERAMIC CHIP CK73B 50V 10000PF K
C547	24109103	CERAMIC CHIP CK73B 50V 10000PF K
C548	24763101	ELECTROLYTIC, 16V 100UF M
C563	24206010	ELECTROLYTIC, 50V 1.0UF M 7L 3A
C564	24797229	ELECTROLYTIC, 50V 2.2UF M
C571	24100104	CERAMIC CHIP, 25V 100000PF Z
C581	24100104	CERAMIC CHIP, 25V 100000PF Z
C582	24100104	CERAMIC CHIP, 25V 100000PF Z
C583	24794470	ELECTORLYTIC, 16V 47UF M
C584	24100104	CERAMIC CHIP, 25V 100000PF Z
C585	24100104	CERAMIC CHIP, 25V 100000PF Z
C599	24794100	ELECTROLYTIC, 16V 10UF M
C601	24797229	ELECTROLYTIC, 50V 2.2UF M
C602	24797229	ELECTROLYTIC, 50V 2.2UF M
C603	24591102	PLASTIC FILM, 50V 1000PF J
C604	24591102	PLASTIC FILM, 50V 1000PF J
C605	24669100	ELECTROLYTIC, 50V 10UF M 3A
C606	24669100	ELECTROLYTIC, 50V 10UF M 3A
C607	24667470	ELECTROLYTIC, 25V 47UF M 3A
C608	24667470	ELECTROLYTIC, 25V 47UF M 3A
C609	24667470	ELECTROLYTIC, 25V 47UF M 3A

Location No.	Parts No.	Description
C610	24669479	ELECTROLYTIC, 50V 4.7UF M 3A
C612	24669102	ELECTROLYTIC CE04Q 50V 1000UF M 3A
C613	24503042	MT PLA CAP 63V 0.12UF J
C614	24503042	MT PLA CAP 63V 0.12UF J
C615	24669102	ELECTROLYTIC CE04Q 50V 1000UF M 3A
C616	24669102	ELECTROLYTIC CE04Q 50V 1000UF M 3A
C617	24669220	ELECTROLYTIC, 50V 22UF M 3A
C618	24797478	ELECTROLYTIC, 50V 0.47UF M
C619	24794471	ELECTROLYTIC, 16V 470UF M
C621	24797220	ELECTROLYTIC CE04G 50V 22UF M
C622	24591103	PLASTIC FILM, 50V 0.01MF J
C624	24797100	ELECTROLYTIC, 50V 10UF M
C626	24797478	ELECTROLYTIC, 50V 0.47UF M
C627	24797220	ELECTROLYTIC CE04G 50V 22UF M
C628	24797100	ELECTROLYTIC, 50V 10UF M
C629	24503039	MT PLA CAP 63V 0.068UF J
C631	24797220	ELECTROLYTIC CE04G 50V 22UF M
C633	24795221	ELECTROLYTIC, 25V 220UF M
C634	24765101	ELECTROLYITC CE04G 35V 100UF M
C635	24797100	ELECTROLYTIC, 50V 10UF M
C636	24797100	ELECTROLYTIC, 50V 10UF M
C639	24793222	ELECTROLYTIC CE04G 10V 2200UF M
C641	24797479	ELECTROLYTIC, 50V 4.7UF M
C642	24797479	ELECTROLYTIC, 50V 4.7UF M
C643	24591102	PLASTIC FILM, 50V 1000PF J
C644	24591102	PLASTIC FILM, 50V 1000PF J
C645	24797010	ELECTROLYTIC CE04G 50V 1.0UF M
C646	24667470	ELECTROLYTIC, 25V 47UF M 3A
C647	24669100	ELECTROLYTIC, 50V 10UF M 3A
C648	24669100	ELECTROLYTIC, 50V 10UF M 3A
C649	24667470	ELECTROLYTIC, 25V 47UF M 3A
C650	24667470	ELECTROLYTIC, 25V 47UF M 3A
C651	24503042	MT PLA CAP 63V 0.12UF J
C652	24503042	MT PLA CAP 63V 0.12UF J
C653	24668102	ELECTROLYTIC, 35V 1000UF M 3A
C654	24668102	ELECTROLYTIC, 35V 1000UF M 3A
C655	24797479	ELECTROLYTIC, 50V 4.7UF M
C656	24591122	PLASTIC FILM, 50V 1200PF J
C657	24503040	MT PLA CAP 63V 0.082UF J
C658	24591102	PLASTIC FILM, 50V 1000PF J
C659	24797010	ELECTROLYTIC CE04G 50V 1.0UF M
C660	24667470	ELECTROLYTIC, 25V 47UF M 3A
C661	24669100	ELECTROLYTIC, 50V 10UF M 3A
C662	24669100	ELECTROLYTIC, 50V 10UF M 3A
C663	24667470	ELECTROLYTIC, 25V 47UF M 3A
C664	24667470	ELECTROLYTIC, 25V 47UF M 3A
C665	24503042	MT PLA CAP 63V 0.12UF J
C666	24503042	MT PLA CAP 63V 0.12UF J
C667	24668102	ELECTROLYTIC, 35V 1000UF M 3A
C668	24668102	ELECTROLYTIC, 35V 1000UF M 3A
C669	24668102	ELECTROLYTIC, 35V 1000UF M 3A
C701	24105471	CERAMIC CHIP CC73CH 50V 470pF J
C702	24591222	PLASTIC FILM, 50V 2200PF J
C703	24591822	PLASTIC FILM, 50V 8200PF J
C704	24105150	CERAMIC CHIP, 50V CH 15PF J
C705	24206479	ELECTROLYTIC, 50V 4.7UF M 7L 3A
C707	24797470	ELECTROLYTIC, 50V 47UF M
C708	24591272	PLASTIC FILM, 50V 2700PF J
C711	24105471	CERAMIC CHIP CC73CH 50V 470pF J
C712	24797470	ELECTROLYTIC, 50V 47UF M
C712	24591222	PLASTIC FILM, 50V 2200PF J
C713	24790470	ELECTROLYTIC, 160V 47UF M
C713	24591822	PLASTIC FILM, 50V 8200PF J
C714	24105150	CERAMIC CHIP, 50V CH 15PF J
C715	24214472	CERAMIC DISK CK45 B 500V 4700PF K

Location No.	Parts No.	Description
C717	24109103	CERAMIC CHIP CK73B 50V 10000PF K
C717	24214472	CERAMIC DISK CK45 B 500V 4700PF K
C718	24666470	ELECTORLYTIC, 16V 47UF M 3A
C718	24591272	PLASTIC FILM, 50V 2700PF J
C719	24435560	CERAMIC DISC, 500V SL 56PF J
C720	24790100	ELECTROLYTIC CE04G 160V 10UF M
C721	24105471	CERAMIC CHIP CC73CH 50V 470pF J
C721	24666470	ELECTORLYTIC, 16V 47UF M 3A
C722	24591222	PLASTIC FILM, 50V 2200PF J
C723	24591822	PLASTIC FILM, 50V 8200PF J
C724	24105150	CERAMIC CHIP, 50V CH 15PF J
C726	24212102	CERAMIC DISK CK45 B 50V 1000PF K
C728	24591272	PLASTIC FILM, 50V 2700PF J
C731	24105471	CERAMIC CHIP CC73CH 50V 470pF J
C732	24591222	PLASTIC FILM, 50V 2200PF J
C733	24591822	PLASTIC FILM, 50V 8200PF J
C734	24105150	CERAMIC CHIP, 50V CH 15PF J
C737	24109103	CERAMIC CHIP CK73B 50V 10000PF K
C738	24591272	PLASTIC FILM, 50V 2700PF J
C741	24105471	CERAMIC CHIP CC73CH 50V 470pF J
C742	24591222	PLASTIC FILM, 50V 2200PF J
C743	24591822	PLASTIC FILM, 50V 8200PF J
C744	24105150	CERAMIC CHIP, 50V CH 15PF J
C748	24591272	PLASTIC FILM, 50V 2700PF J
C751	24105471	CERAMIC CHIP CC73CH 50V 470pF J
C752	24591222	PLASTIC FILM, 50V 2200PF J
C753	24591822	PLASTIC FILM, 50V 8200PF J
C754	24105150	CERAMIC CHIP, 50V CH 15PF J
C757	24109103	CERAMIC CHIP CK73B 50V 10000PF K
C758	24591272	PLASTIC FILM, 50V 2700PF J
C760	24797470	ELECTROLYTIC, 50V 47UF M
C761	24212102	CERAMIC DISK CK45 B 50V 1000PF K
C761	24667331	ELECTROLYTIC, 25V 330UF M 3A
C762	24797470	ELECTROLYTIC, 50V 47UF M
C765	24109103	CERAMIC CHIP CK73B 50V 10000PF K
C765	24214472	CERAMIC DISK CK45 B 500V 4700PF K
C766	24214472	CERAMIC DISK CK45 B 500V 4700PF K
C766	24669331	ELECTROLYTIC, 50V 330UF M 3A
C767	24790470	ELECTROLYTIC, 160V 47UF M
C767	24567104	PLASTIC FILM, 50V 0.1UF J
C768	24666470	ELECTORLYTIC, 16V 47UF M 3A
C768	24567104	PLASTIC FILM, 50V 0.1UF J
C769	24666470	ELECTORLYTIC, 16V 47UF M 3A
C769	24567104	PLASTIC FILM, 50V 0.1UF J
C770	24435560	CERAMIC DISC, 500V SL 56PF J
C771	24790100	ELECTROLYTIC CE04G 160V 10UF M
C780	24797470	ELECTROLYTIC, 50V 47UF M
C781	24212102	CERAMIC DISK CK45 B 50V 1000PF K
C782	24797470	ELECTROLYTIC, 50V 47UF M
C784	24214472	CERAMIC DISK CK45 B 500V 4700PF K
C786	24214472	CERAMIC DISK CK45 B 500V 4700PF K
C787	24790470	ELECTROLYTIC, 160V 47UF M
C788	24666470	ELECTORLYTIC, 16V 47UF M 3A
C789	24666470	ELECTORLYTIC, 16V 47UF M 3A
C790	24435560	CERAMIC DISC, 500V SL 56PF J
C791	24790100	ELECTROLYTIC CE04G 160V 10UF M
⚠ C801	24503055	MT PLA AC275V 0.22UF M
⚠ C802	24503055	MT PLA AC275V 0.22UF M
C805	24092281	CERAMIC DISC CK45E AC 250V 4700PF
C806	24092281	CERAMIC DISC CK45E AC 250V 4700PF
C810	24086935	400V 560M35F 400V 560UF M 35F
⚠ C811	24092555	CERAMIC DISC CK45B AC250V 1000PF M
⚠ C812	24092555	CERAMIC DISC CK45B AC250V 1000PF M
C817	24503041	PLASTIC FILM , 63V 0.1UF J
C818	24669010	ELECTROLYTIC, 50V 1.0UF M 3A

Location No.	Parts No.	Description
C819	24073076	ELECTROLYTIC, 35V 6800UF M 3A
C820	24086072	ELECROLYTIC CE692R 450V 100UF M 3D
C821	24082926	PLASTIC FILM, AC275V 0.1UF M
C822	24092553	CERAMIC DISC, AC250V B 470PF K
C824	24095887	PLASTIC FILM, 630V 11000PF H
C825	24669331	ELECTROLYTIC, 50V 330UF M 3A
C827	24436221	CERAMIC DISC CC45 SL 50V 220PF J
C828	24503041	PLASTIC FILM , 63V 0.1UF J
C829	24214471	CERAMIC DISK CK45 B 500V 470PF K
C830	24503047	MT PLA CAP 63V 0.33UF J
C831	24666101	ELECTROLYTIC, 16V 100UF M 3A
C832	24503047	MT PLA CAP 63V 0.33UF J
C833	24666470	ELECTORLYTIC, 16V 47UF M 3A
C834	24503047	MT PLA CAP 63V 0.33UF J
C835	24665101	ELECTROLYTIC, 10V 100UF M 3A
C836	24503047	MT PLA CAP 63V 0.33UF J
C837	24665470	ELECTROLYTIC, 10V 47UF M 3A
C841	24503053	MT PLA CAP 63V 1.0UF J
C842	24666101	ELECTROLYTIC, 16V 100UF M 3A
C843	24503041	PLASTIC FILM , 63V 0.1UF J
C848	24666100	ELECTROLYTIC, 10V 10UF M 3A
C849	24666100	ELECTROLYTIC, 10V 10UF M 3A
C850	24667222	ELECTROLYTIC, 25V 2200UF M 3A
C851	24667102	ELECTROLYTIC CE04Q 25V 1000UF M 3A
C852	24667472	ELECTROLYTIC, 25V 4700UF M 3A
C853	24667472	ELECTROLYTIC, 25V 4700UF M 3A
C854	24669102	ELECTROLYTIC CE04Q 50V 1000UF M 3A
C855	24669331	ELECTROLYTIC, 50V 330UF M 3A
C856	24667102	ELECTROLYTIC CE04Q 25V 1000UF M 3A
C860	24214103	CERAMIC DISC, 500V B 10000PF K
C863	24503045	MT PLA CAP 63V 0.22UF J
C864	24092474	CERAMIC DISC, 2KV B 220PF K
C866	24503053	MT PLA CAP 63V 1.0UF J
C867	24591472	PLASTIC FILM, 50V 4700PF J
C868	24668101	ELECTROLYTIC, 35V 100UF M 3A
C869	24678229	ELECTROLYTIC, 200V 2.2UF M 3A
C870	24082890	PLASTIC FILM CQ92 T 800V 82000PF J
C871	24092481	CERAMIC DISK, 2KV 820PF K
C872	24092478	CERAMIC DISK, 2KV 470PF K
C873	24503045	MT PLA CAP 63V 0.22UF J
C874	24214102	CERAMIC DISC, 500V B 1000PF K
C876	24503049	MT PLA CAP 63V 0.47UF J
C877	24092480	CERAMIC DISK, 2KV 680PF K
C880	24503049	MT PLA CAP 63V 0.47UF J
C881	24092475	CERAMIC DISC, 2KV B 270PF K
C882	24092475	CERAMIC DISC, 2KV B 270PF K
C883	24666220	ELECTROLYTIC, 16V 22UF M 3A
C884	24086916	ELECTROLYTIC CE692R 160V 330UF M 3D
C885	24666100	ELECTROLYTIC, 10V 10UF M 3A
C886	24669229	ELECTROLYTIC, 50V 2.2UF M 3A
C890	24669222	ELECTROLYTIC, 50V 2200UF M 3A
C891	24082229	PLASTIC FILM, 250V 0.1MF D
C892	24678478	ELECTROLYTIC, 200V 0.47UF M 3A
C894	24667222	ELECTROLYTIC, 25V 2200UF M 3A
C895	24666332	ELECTROLYTIC CE04Q 16V 3300UF M 3A
C898	24092398	CERAMIC DISC, 25V 0.1UF Z, 24092398A
		NI TOOITSU
C901	24211102	CERAMIC DISC, 2KV B 1000PF K
C902	24794100	ELECTROLYTIC, 16V 10UF M
C904	24436561	CERAMIC DISC CC45 SL 50V560PF J
C907	24214101	CERAMIC DISK, 500V B 100PF K
C908	24436390	CERAMIC DISC, 50V SL 39PFJ
C911	24211102	CERAMIC DISC, 2KV B 1000PF K
C912	24794100	ELECTROLYTIC, 16V 10UF M
C914	24436471	CERAMIC DISC, 50V SL 470PF J

Location No.	Parts No.	Description
C915	24679330	ELECTROLYTIC, 250V 33UF M 3A
C917	24214101	CERAMIC DISK, 500V B 100PF K
C918	24503041	PLASTIC FILM , 63V 0.1UF J
C921	24211102	CERAMIC DISC, 2KV B 1000PF K
C922	24794100	ELECTROLYTIC, 16V 10UF M
C923	24436561	CERAMIC DISC CC45 SL 50V560PF J
C926	24214101	CERAMIC DISK, 500V B 100PF K
C927	24503041	PLASTIC FILM , 63V 0.1UF J
C928	24794100	ELECTROLYTIC, 16V 10UF M
C961	24794100	ELECTROLYTIC, 16V 10UF M
C962	24794100	ELECTROLYTIC, 16V 10UF M
C963	24503041	PLASTIC FILM , 63V 0.1UF J
C964	24503041	PLASTIC FILM , 63V 0.1UF J
C4401	24763221	ELECTROLYTIC, 16V 220UF M
C4402	24109103	CERAMIC CHIP CK73B 50V 10000PF K
C4403	24797010	ELECTROLYTIC CE04G 50V 1.0UF M
C4404	24109103	CERAMIC CHIP CK73B 50V 10000PF K
C4405	24100104	CERAMIC CHIP, 25V 100000PF Z
C4406	24109103	CERAMIC CHIP CK73B 50V 10000PF K
C4451	24763101	ELECTROLYTIC, 16V 100UF M
C5020	24109103	CERAMIC CHIP CK73B 50V 10000PF K
C5030	24763101	ELECTROLYTIC, 16V 100UF M
C5080	24206010	ELECTROLYTIC, 50V 1.0UF M 7L 3A
C5090	24763101	ELECTROLYTIC, 16V 100UF M
C7702	24105101	CERAMIC CHIP, 50V CH 100PF J
C7747	24667101	ELECTROLYTIC, 25V 100UF M 3A
C7749	24567334	PLASTIC FILM, 50V 0.33UF J
C7750	24667101	ELECTROLYTIC, 25V 100UF M 3A
C7755	24667101	ELECTROLYTIC, 25V 100UF M 3A
C7757	24567334	PLASTIC FILM, 50V 0.33UF J
C7758	24667101	ELECTROLYTIC, 25V 100UF M 3A
C7767	24667101	ELECTROLYTIC, 25V 100UF M 3A
C7769	24109103	CERAMIC CHIP CK73B 50V 10000PF K
C7774	24105331	CERAMIC CHIP CC73CH 50V 330pF J
C7776	24667101	ELECTROLYTIC, 25V 100UF M 3A
C7779	24669479	ELECTROLYTIC, 50V 4.7UF M 3A
C7782	24669221	ELECTROLYTIC CE04Q 50V 220UF M 3A
C7785	24667221	ELECTROLYTIC, 25V 220UF M 3A
C7788	24669221	ELECTROLYTIC CE04Q 50V 220UF M 3A
C7791	24667221	ELECTROLYTIC, 25V 220UF M 3A
C7792	24109472	CERAMIC CHIP, 50V B 4700PF K
C7793	24567104	PLASTIC FILM, 50V 0.1UF J
C7794	24567104	PLASTIC FILM, 50V 0.1UF J
C7795	24109472	CERAMIC CHIP, 50V B 4700PF K
C7796	24666100	ELECTROLYTIC, 10V 10UF M 3A
C7798	24109102	CERAMIC CHIP CK73B 50V 1000PF K
C7810	24105471	CERAMIC CHIP CC73CH 50V 470pF J
C7811	24105471	CERAMIC CHIP CC73CH 50V 470pF J
C7812	24105331	CERAMIC CHIP CC73CH 50V 330pF J
C7813	24669221	ELECTROLYTIC CE04Q 50V 220UF M 3A
C7814	24669221	ELECTROLYTIC CE04Q 50V 220UF M 3A
CA03	24105180	CERAMIC CHIP CC73CH 50V 18PF J
CA04	24105180	CERAMIC CHIP CC73CH 50V 18PF J
CA09	24105101	CERAMIC CHIP, 50V CH 100PF J
CA10	24105101	CERAMIC CHIP, 50V CH 100PF J
CA12	24105101	CERAMIC CHIP, 50V CH 100PF J
CA15	24105101	CERAMIC CHIP, 50V CH 100PF J
CA16	24105101	CERAMIC CHIP, 50V CH 100PF J
CA17	24105101	CERAMIC CHIP, 50V CH 100PF J
CA20	24212101	CERAMIC DISK, 50V B 100PF K
CA33	24100103	CERAMIC CHIP, 50V 10000PF Z
CA42	24794101	ELECTROLYTIC, 16V 100UF M
CA43	24109103	CERAMIC CHIP CK73B 50V 10000PF K
CA45	24109103	CERAMIC CHIP CK73B 50V 10000PF K
CA46	24109103	CERAMIC CHIP CK73B 50V 10000PF K

Location No.	Parts No.	Description
CA58	24794330	ELECTROLYTIC CE04G 16V 33UF M
CA67	24100103	CERAMIC CHIP, 50V 10000PF Z
CA68	24794100	ELECTROLYTIC, 16V 10UF M
CA69	24100103	CERAMIC CHIP, 50V 10000PF Z
CA70	24794100	ELECTROLYTIC, 16V 10UF M
CA80	24794470	ELECTORLYTIC, 16V 47UF M
CA81	24100104	CERAMIC CHIP, 25V 100000PF Z
CA83	24092538	CERAMIC CHIP, 10V F 1UF Z
CB01	24794470	ELECTORLYTIC, 16V 47UF M
CB04	24092538	CERAMIC CHIP, 10V F 1UF Z
CB05	24109222	CERAMIC CHIP CK73B 50V 2200PF K
CB06	24105561	CERAMIC CHIP, 50V CH 560PF J
CB07	24109332	CERAMIC CHIP CK73B 50V 3300PF K
CB40	24092538	CERAMIC CHIP, 10V F 1UF Z
CB41	24109222	CERAMIC CHIP CK73B 50V 2200PF K
CB42	24105561	CERAMIC CHIP, 50V CH 560PF J
CB43	24109332	CERAMIC CHIP CK73B 50V 3300PF K
CB90	24100103	CERAMIC CHIP, 50V 10000PF Z
CC01	24109103	CERAMIC CHIP CK73B 50V 10000PF K
CC01	24100103	CERAMIC CHIP, 50V 10000PF Z
CC02	24100103	CERAMIC CHIP, 50V 10000PF Z
CC03	24100103	CERAMIC CHIP, 50V 10000PF Z
CC04	24100103	CERAMIC CHIP, 50V 10000PF Z
CC04	24105220	CERAMIC CHIP, 50V CH 22PF J
CC05	24109102	CERAMIC CHIP CK73B 50V 1000PF K
CC05	24105101	CERAMIC CHIP, 50V CH 100PF J
CC06	24109102	CERAMIC CHIP CK73B 50V 1000PF K
CC06	24105101	CERAMIC CHIP, 50V CH 100PF J
CC07	24105101	CERAMIC CHIP, 50V CH 100PF J
CC08	24109103	CERAMIC CHIP CK73B 50V 10000PF K
CC09	24105470	CERAMIC CHIP, 50V CH 47PF J
CC10	24105470	CERAMIC CHIP, 50V CH 47PF J
CC11	24105470	CERAMIC CHIP, 50V CH 47PF J
CC12	24109102	CERAMIC CHIP CK73B 50V 1000PF K
CC13	24109102	CERAMIC CHIP CK73B 50V 1000PF K
CC13	24100104	CERAMIC CHIP, 25V 100000PF Z
CC14	24100104	CERAMIC CHIP, 25V 100000PF Z
CC15	24100104	CERAMIC CHIP, 25V 100000PF Z
CC16	24109103	CERAMIC CHIP CK73B 50V 10000PF K
CC20	24105220	CERAMIC CHIP, 50V CH 22PF J
CC26	24109103	CERAMIC CHIP CK73B 50V 10000PF K
CC27	24109103	CERAMIC CHIP CK73B 50V 10000PF K
CC30	24100103	CERAMIC CHIP, 50V 10000PF Z
CC31	24109102	CERAMIC CHIP CK73B 50V 1000PF K
CC32	24100103	CERAMIC CHIP, 50V 10000PF Z
CC33	24105101	CERAMIC CHIP, 50V CH 100PF J
CC41	24105470	CERAMIC CHIP, 50V CH 47PF J
CC42	24105470	CERAMIC CHIP, 50V CH 47PF J
CC47	24212332	CERAMIC DISC, 50V B 3300PF K
CC48	24212332	CERAMIC DISC, 50V B 3300PF K
CC60	24109102	CERAMIC CHIP CK73B 50V 1000PF K
CC61	24109102	CERAMIC CHIP CK73B 50V 1000PF K
CC62	24109102	CERAMIC CHIP CK73B 50V 1000PF K
CC63	24109102	CERAMIC CHIP CK73B 50V 1000PF K
CC64	24109102	CERAMIC CHIP CK73B 50V 1000PF K
CC65	24109102	CERAMIC CHIP CK73B 50V 1000PF K
CC66	24109102	CERAMIC CHIP CK73B 50V 1000PF K
CC67	24109102	CERAMIC CHIP CK73B 50V 1000PF K
CC68	24109102	CERAMIC CHIP CK73B 50V 1000PF K
CC69	24109102	CERAMIC CHIP CK73B 50V 1000PF K
CC70	24109102	CERAMIC CHIP CK73B 50V 1000PF K
CC71	24109102	CERAMIC CHIP CK73B 50V 1000PF K
CC72	24109102	CERAMIC CHIP CK73B 50V 1000PF K
CC73	24109102	CERAMIC CHIP CK73B 50V 1000PF K
CC74	24109102	CERAMIC CHIP CK73B 50V 1000PF K

Location No.	Parts No.	Description
CC75	24109102	CERAMIC CHIP CK73B 50V 1000PF K
CC76	24109102	CERAMIC CHIP CK73B 50V 1000PF K
CC77	24109102	CERAMIC CHIP CK73B 50V 1000PF K
CC78	24109102	CERAMIC CHIP CK73B 50V 1000PF K
CC82	24105151	CERAMIC CHIP CC73CH 50V 150PF J
CD81	24100104	CERAMIC CHIP, 25V 100000PF Z
CD82	24794100	ELECTROLYTIC, 16V 10UF M
CD83	24092733	CERAMIC CHIP CK73B 50V 22000PF K
CD84	24092733	CERAMIC CHIP CK73B 50V 22000PF K
CD85	24100104	CERAMIC CHIP, 25V 100000PF Z
CD86	24092733	CERAMIC CHIP CK73B 50V 22000PF K
CD87	24793221	ELECTROLYTIC CE04G 10V 220UF M
CD88	24109222	CERAMIC CHIP CK73B 50V 2200PF K
CD89	24794100	ELECTROLYTIC, 16V 10UF M
CF01	24793101	ELECTROLYTIC, 10V 100UF M
CF02	24100104	CERAMIC CHIP, 25V 100000PF Z
CF03	24100104	CERAMIC CHIP, 25V 100000PF Z
CF04	24100104	CERAMIC CHIP, 25V 100000PF Z
CF05	24100104	CERAMIC CHIP, 25V 100000PF Z
CF06	24793101	ELECTROLYTIC, 10V 100UF M
CF07	24100104	CERAMIC CHIP, 25V 100000PF Z
CF08	24794100	ELECTROLYTIC, 16V 10UF M
CF09	24109102	CERAMIC CHIP CK73B 50V 1000PF K
CF10	24794100	ELECTROLYTIC, 16V 10UF M
CF11	24109102	CERAMIC CHIP CK73B 50V 1000PF K
CF12	24100104	CERAMIC CHIP, 25V 100000PF Z
CF13	24100104	CERAMIC CHIP, 25V 100000PF Z
CF14	24100104	CERAMIC CHIP, 25V 100000PF Z
CF15	24100104	CERAMIC CHIP, 25V 100000PF Z
CF16	24793101	ELECTROLYTIC, 10V 100UF M
CF17	24100104	CERAMIC CHIP, 25V 100000PF Z
CF18	24794100	ELECTROLYTIC, 16V 10UF M
CF19	24109102	CERAMIC CHIP CK73B 50V 1000PF K
CF20	24105220	CERAMIC CHIP, 50V CH 22PF J
CF20	24105330	CERAMIC CHIP, 50V CH 33PF J
CF21	24105220	CERAMIC CHIP, 50V CH 22PF J
CF21	24105330	CERAMIC CHIP, 50V CH 33PF J
CF22	24100104	CERAMIC CHIP, 25V 100000PF Z
CF23	24100104	CERAMIC CHIP, 25V 100000PF Z
CF24	24100104	CERAMIC CHIP, 25V 100000PF Z
CF25	24794100	ELECTROLYTIC, 16V 10UF M
CF26	24109102	CERAMIC CHIP CK73B 50V 1000PF K
CF27	24100104	CERAMIC CHIP, 25V 100000PF Z
CF28	24100104	CERAMIC CHIP, 25V 100000PF Z
CF29	24100104	CERAMIC CHIP, 25V 100000PF Z
CF30	24100104	CERAMIC CHIP, 25V 100000PF Z
CF31	24100104	CERAMIC CHIP, 25V 100000PF Z
CF32	24794100	ELECTROLYTIC, 16V 10UF M
CF33	24105330	CERAMIC CHIP, 50V CH 33PF J
CF34	24092538	CERAMIC CHIP, 10V F 1UF Z
CF35	24105100	CERAMIC CHIP CC73CH 50V 10PF D
CF36	24105220	CERAMIC CHIP, 50V CH 22PF J
CF37	24105151	CERAMIC CHIP CC73CH 50V 150PF J
CF38	24794100	ELECTROLYTIC, 16V 10UF M
CF39	24109103	CERAMIC CHIP CK73B 50V 10000PF K
CF40	24100104	CERAMIC CHIP, 25V 100000PF Z
CF41	24100104	CERAMIC CHIP, 25V 100000PF Z
CF42	24100104	CERAMIC CHIP, 25V 100000PF Z
CF43	24100104	CERAMIC CHIP, 25V 100000PF Z
CF44	24100104	CERAMIC CHIP, 25V 100000PF Z
CF45	24100104	CERAMIC CHIP, 25V 100000PF Z
CF46	24100104	CERAMIC CHIP, 25V 100000PF Z
CF47	24100104	CERAMIC CHIP, 25V 100000PF Z
CF48	24100104	CERAMIC CHIP, 25V 100000PF Z
CF49	24100104	CERAMIC CHIP, 25V 100000PF Z

Location No.	Parts No.	Description
CF50	24794100	ELECTROLYTIC, 16V 10UF M
CF51	24109102	CERAMIC CHIP CK73B 50V 1000PF K
CF52	24100104	CERAMIC CHIP, 25V 100000PF Z
CF55	24100104	CERAMIC CHIP, 25V 100000PF Z
CF71	24100104	CERAMIC CHIP, 25V 100000PF Z
CG01	24082926	PLASTIC FILM, AC275V 0.1UF M
CG05	24092553	CERAMIC DISC, AC250V B 470PF K
CG06	24073101	ELECTROLYTIC CE04Q 400V 47UF M 3A
CG07	24503049	MT PLA CAP 63V 0.47UF J
CG08	24214471	CERAMIC DISK CK45 B 500V 470PF K
CG10	24667331	ELECTROLYTIC, 25V 330UF M 3A
CG11	24667470	ELECTROLYTIC, 25V 47UF M 3A
CG12	24212681	CERAMIC DISK CK45 B 50V 680PF K
CG13	24092333	CERAMIC DISC CK45R 2KV 100PF K
CG20	24676470	ELECTROLYTIC, 100V 47UF M 3A
CG27	24666222	ELECTROLYTIC, 16V 2200UF M 3A
CG34	24666101	ELECTROLYTIC, 16V 100UF M 3A
CG35	24665470	ELECTROLYTIC, 10V 47UF M 3A
CG62	24214471	CERAMIC DISK CK45 B 500V 470PF K
CG65	24214471	CERAMIC DISK CK45 B 500V 470PF K
CH001	24100104	CERAMIC CHIP, 25V 100000PF Z
CH004	24100104	CERAMIC CHIP, 25V 100000PF Z
CH005	24100104	CERAMIC CHIP, 25V 100000PF Z
CH006	24100104	CERAMIC CHIP, 25V 100000PF Z
CH007	24100104	CERAMIC CHIP, 25V 100000PF Z
CH008	24100104	CERAMIC CHIP, 25V 100000PF Z
CH009	24100104	CERAMIC CHIP, 25V 100000PF Z
CH010	24092538	CERAMIC CHIP, 10V F 1UF Z
CH011	24762221	ELECTROLYTIC, 10V 220UF M
CH012	24763101	ELECTROLYTIC, 16V 100UF M
CH013	24763101	ELECTROLYTIC, 16V 100UF M
CH014	24108101	CERAMIC CHIP, 50V SL 100PF J
CH015	24108330	CERAMIC CHIP, 50V SL 33PF J
CH016	24108330	CERAMIC CHIP, 50V SL 33PF J
CH017	24108330	CERAMIC CHIP, 50V SL 33PF J
CH018	24108330	CERAMIC CHIP, 50V SL 33PF J
CH019	24108330	CERAMIC CHIP, 50V SL 33PF J
CH020	24108330	CERAMIC CHIP, 50V SL 33PF J
CH040	24100104	CERAMIC CHIP, 25V 100000PF Z
CH041	24108101	CERAMIC CHIP, 50V SL 100PF J
CH042	24108101	CERAMIC CHIP, 50V SL 100PF J
CH043	24108101	CERAMIC CHIP, 50V SL 100PF J
CH044	24108101	CERAMIC CHIP, 50V SL 100PF J
CH045	24108101	CERAMIC CHIP, 50V SL 100PF J
CH046	24108101	CERAMIC CHIP, 50V SL 100PF J
CH047	24108101	CERAMIC CHIP, 50V SL 100PF J
CH048	24108101	CERAMIC CHIP, 50V SL 100PF J
CH051	24100104	CERAMIC CHIP, 25V 100000PF Z
CH052	24100104	CERAMIC CHIP, 25V 100000PF Z
CH053	24105070	CERAMIC CHIP CC73CH 50V 7PF D
CH061	24109103	CERAMIC CHIP CK73B 50V 10000PF K
CH062	24092730	CERAMIC CHIP, 16V 0.1UF K
CH063	24100104	CERAMIC CHIP, 25V 100000PF Z
CH101	24105070	CERAMIC CHIP CC73CH 50V 7PF D
CH102	24105070	CERAMIC CHIP CC73CH 50V 7PF D
CH120	24100104	CERAMIC CHIP, 25V 100000PF Z
CH121	24100104	CERAMIC CHIP, 25V 100000PF Z
CH122	24100104	CERAMIC CHIP, 25V 100000PF Z
CH123	24100104	CERAMIC CHIP, 25V 100000PF Z
CH124	24100104	CERAMIC CHIP, 25V 100000PF Z
CH125	24100104	CERAMIC CHIP, 25V 100000PF Z
CH126	24100104	CERAMIC CHIP, 25V 100000PF Z
CH127	24100104	CERAMIC CHIP, 25V 100000PF Z
CH128	24108221	CERAMIC CHIP, 50V SL 220PF J
CH129	24108221	CERAMIC CHIP, 50V SL 220PF J

Location No.	Parts No.	Description
CH140	24100104	CERAMIC CHIP, 25V 100000PF Z
CH141	24100104	CERAMIC CHIP, 25V 100000PF Z
CH142	24100104	CERAMIC CHIP, 25V 100000PF Z
CH143	24100104	CERAMIC CHIP, 25V 100000PF Z
CH144	24100104	CERAMIC CHIP, 25V 100000PF Z
CH145	24100104	CERAMIC CHIP, 25V 100000PF Z
CH146	24100104	CERAMIC CHIP, 25V 100000PF Z
CH147	24100104	CERAMIC CHIP, 25V 100000PF Z
CH148	24108221	CERAMIC CHIP, 50V SL 220PF J
CH149	24108221	CERAMIC CHIP, 50V SL 220PF J
CH160	24100104	CERAMIC CHIP, 25V 100000PF Z
CH161	24100104	CERAMIC CHIP, 25V 100000PF Z
CH162	24100104	CERAMIC CHIP, 25V 100000PF Z
CH163	24100104	CERAMIC CHIP, 25V 100000PF Z
CH164	24100104	CERAMIC CHIP, 25V 100000PF Z
CH165	24100104	CERAMIC CHIP, 25V 100000PF Z
CH166	24100104	CERAMIC CHIP, 25V 100000PF Z
CH167	24100104	CERAMIC CHIP, 25V 100000PF Z
CH168	24108221	CERAMIC CHIP, 50V SL 220PF J
CH169	24108221	CERAMIC CHIP, 50V SL 220PF J
CH170	24105391	CERAMIC CHIP CC73CH 50V 390pF J
CH171	24105102	CERAMIC CHIP CC73CH 25V 1000PF J
CH172	24105331	CERAMIC CHIP CC73CH 50V 330pF J
CH173	24105102	CERAMIC CHIP CC73CH 25V 1000PF J
CH174	24105391	CERAMIC CHIP CC73CH 50V 390pF J
CH175	24105220	CERAMIC CHIP, 50V CH 22PF J
CH176	24105391	CERAMIC CHIP CC73CH 50V 390pF J
CH177	24105220	CERAMIC CHIP, 50V CH 22PF J
CH178	24105151	CERAMIC CHIP CC73CH 50V 150PF J
CH179	24105102	CERAMIC CHIP CC73CH 25V 1000PF J
CH180	24105391	CERAMIC CHIP CC73CH 50V 390pF J
CH181	24105102	CERAMIC CHIP CC73CH 25V 1000PF J
CH182	24105391	CERAMIC CHIP CC73CH 50V 390pF J
CH183	24105220	CERAMIC CHIP, 50V CH 22PF J
CH184	24105391	CERAMIC CHIP CC73CH 50V 390pF J
CH185	24105220	CERAMIC CHIP, 50V CH 22PF J
CH186	24105331	CERAMIC CHIP CC73CH 50V 330pF J
CH187	24105102	CERAMIC CHIP CC73CH 25V 1000PF J
CH188	24105151	CERAMIC CHIP CC73CH 50V 150PF J
CH189	24105102	CERAMIC CHIP CC73CH 25V 1000PF J
CH190	24105391	CERAMIC CHIP CC73CH 50V 390pF J
CH191	24105102	CERAMIC CHIP CC73CH 25V 1000PF J
CH192	24105391	CERAMIC CHIP CC73CH 50V 390pF J
CH193	24105220	CERAMIC CHIP, 50V CH 22PF J
CH194	24105331	CERAMIC CHIP CC73CH 50V 330pF J
CH195	24105102	CERAMIC CHIP CC73CH 25V 1000PF J
CH196	24105391	CERAMIC CHIP CC73CH 50V 390pF J
CH197	24105220	CERAMIC CHIP, 50V CH 22PF J
CH198	24105151	CERAMIC CHIP CC73CH 50V 150PF J
CH199	24105102	CERAMIC CHIP CC73CH 25V 1000PF J
CH200	24105391	CERAMIC CHIP CC73CH 50V 390pF J
CH201	24105102	CERAMIC CHIP CC73CH 25V 1000PF J
CH202	24105220	CERAMIC CHIP, 50V CH 22PF J
CH203	24105391	CERAMIC CHIP CC73CH 50V 390pF J
CH204	24105391	CERAMIC CHIP CC73CH 50V 390pF J
CH205	24105220	CERAMIC CHIP, 50V CH 22PF J
CH206	24105331	CERAMIC CHIP CC73CH 50V 330pF J
CH207	24105102	CERAMIC CHIP CC73CH 25V 1000PF J
CH208	24105151	CERAMIC CHIP CC73CH 50V 150PF J
CH209	24105102	CERAMIC CHIP CC73CH 25V 1000PF J
CH210	24105391	CERAMIC CHIP CC73CH 50V 390pF J
CH211	24105102	CERAMIC CHIP CC73CH 25V 1000PF J
CH212	24105331	CERAMIC CHIP CC73CH 50V 330pF J
CH213	24105102	CERAMIC CHIP CC73CH 25V 1000PF J
CH223	24105391	CERAMIC CHIP CC73CH 50V 390pF J

Location No.	Parts No.	Description
CH224	24105220	CERAMIC CHIP, 50V CH 22PF J
CH225	24105391	CERAMIC CHIP CC73CH 50V 390pF J
CH226	24105220	CERAMIC CHIP, 50V CH 22PF J
CH227	24105151	CERAMIC CHIP CC73CH 50V 150PF J
CH228	24105102	CERAMIC CHIP CC73CH 25V 1000PF J
CH229	24105391	CERAMIC CHIP CC73CH 50V 390pF J
CH230	24105102	CERAMIC CHIP CC73CH 25V 1000PF J
CH231	24105391	CERAMIC CHIP CC73CH 50V 390pF J
CH232	24105220	CERAMIC CHIP, 50V CH 22PF J
CH233	24105391	CERAMIC CHIP CC73CH 50V 390pF J
CH234	24105220	CERAMIC CHIP, 50V CH 22PF J
CH235	24105331	CERAMIC CHIP CC73CH 50V 330pF J
CH236	24105102	CERAMIC CHIP CC73CH 25V 1000PF J
CH237	24105151	CERAMIC CHIP CC73CH 50V 150PF J
CH238	24105102	CERAMIC CHIP CC73CH 25V 1000PF J
CH241	24100104	CERAMIC CHIP, 25V 100000PF Z
CH242	24100104	CERAMIC CHIP, 25V 100000PF Z
CH243	24100104	CERAMIC CHIP, 25V 100000PF Z
CH244	24100104	CERAMIC CHIP, 25V 100000PF Z
CH245	24100104	CERAMIC CHIP, 25V 100000PF Z
CH247	24100104	CERAMIC CHIP, 25V 100000PF Z
CH249	24092730	CERAMIC CHIP, 16V 0.1UF K
CH250	24092730	CERAMIC CHIP, 16V 0.1UF K
CR01	24206010	ELECTROLYTIC, 50V 1.0UF M 7L 3A
CR02	24100103	CERAMIC CHIP, 50V 10000PF Z
CR09	24100104	CERAMIC CHIP, 25V 100000PF Z
CR10	24794470	ELECTORLYTIC, 16V 47UF M
CR11	24100104	CERAMIC CHIP, 25V 100000PF Z
CR12	24100104	CERAMIC CHIP, 25V 100000PF Z
CR13	24100104	CERAMIC CHIP, 25V 100000PF Z
CR14	24100104	CERAMIC CHIP, 25V 100000PF Z
CR18	24100104	CERAMIC CHIP, 25V 100000PF Z
CR19	24100104	CERAMIC CHIP, 25V 100000PF Z
CR20	24100104	CERAMIC CHIP, 25V 100000PF Z
CR21	24105101	CERAMIC CHIP, 50V CH 100PF J
CR22	24105101	CERAMIC CHIP, 50V CH 100PF J
CR23	24105101	CERAMIC CHIP, 50V CH 100PF J
CR99	24100104	CERAMIC CHIP, 25V 100000PF Z
CS01	24797229	ELECTROLYTIC, 50V 2.2UF M
CS02	24797229	ELECTROLYTIC, 50V 2.2UF M
CS03	24797229	ELECTROLYTIC, 50V 2.2UF M
CS04	24797229	ELECTROLYTIC, 50V 2.2UF M
CS05	24797229	ELECTROLYTIC, 50V 2.2UF M
CS06	24797229	ELECTROLYTIC, 50V 2.2UF M
CS07	24797229	ELECTROLYTIC, 50V 2.2UF M
CS08	24797229	ELECTROLYTIC, 50V 2.2UF M
CS09	24797229	ELECTROLYTIC, 50V 2.2UF M
CS10	24797229	ELECTROLYTIC, 50V 2.2UF M
CS11	24794100	ELECTROLYTIC, 16V 10UF M
CS12	24794100	ELECTROLYTIC, 16V 10UF M
CS13	24794100	ELECTROLYTIC, 16V 10UF M
CS14	24794100	ELECTROLYTIC, 16V 10UF M
CS18	24794100	ELECTROLYTIC, 16V 10UF M
CS19	24794100	ELECTROLYTIC, 16V 10UF M
CS20	24797478	ELECTROLYTIC, 50V 0.47UF M
CT99	24763102	ELECTROLYTIC, 16V 1000UF M
CV02	24092743	CERAMIC CHIP CK73F 10V 470NF Z
CV03	24092743	CERAMIC CHIP CK73F 10V 470NF Z
CV04	24092743	CERAMIC CHIP CK73F 10V 470NF Z
CV05	24100104	CERAMIC CHIP, 25V 100000PF Z
CV06	24092743	CERAMIC CHIP CK73F 10V 470NF Z
CV07	24100104	CERAMIC CHIP, 25V 100000PF Z
CV08	24203101	ELECTROLYTIC CE04WS 16V 100UF M 7L 3A
CV09	24092743	CERAMIC CHIP CK73F 10V 470NF Z

Location No.	Parts No.	Description
CV10	24794100	ELECTROLYTIC, 16V 10UF M
CV12	24100104	CERAMIC CHIP, 25V 100000PF Z
CV23	24203101	ELECTROLYTIC CE04WS 16V 100UF M 7L 3A
CV24	24100104	CERAMIC CHIP, 25V 100000PF Z
CV25	24794470	ELECTORLYTIC, 16V 47UF M
CV35	24100104	CERAMIC CHIP, 25V 100000PF Z
CV40	24100104	CERAMIC CHIP, 25V 100000PF Z
CV42	24092743	CERAMIC CHIP CK73F 10V 470NF Z
CV44	24092743	CERAMIC CHIP CK73F 10V 470NF Z
CV62	24203101	ELECTROLYTIC CE04WS 16V 100UF M 7L 3A
CV65	24203101	ELECTROLYTIC CE04WS 16V 100UF M 7L 3A
CV66	24203101	ELECTROLYTIC CE04WS 16V 100UF M 7L 3A
CX101	24794470	ELECTORLYTIC, 16V 47UF M
CX102	24085981	ELEC. NONPOLAR CE04J 16V 10UF M 11L NP
CX104	24100104	CERAMIC CHIP, 25V 100000PF Z
CX105	24105330	CERAMIC CHIP, 50V CH 33PF J
CX106	24105270	CERAMIC CHIP, 50V CH 27PF J
CX107	24105101	CERAMIC CHIP, 50V CH 100PF J
CX108	24100104	CERAMIC CHIP, 25V 100000PF Z
CX110	24797479	ELECTROLYTIC, 50V 4.7UF M
CX112	24794100	ELECTROLYTIC, 16V 10UF M
CX113	24100104	CERAMIC CHIP, 25V 100000PF Z
CX114	24100104	CERAMIC CHIP, 25V 100000PF Z
CX115	24100104	CERAMIC CHIP, 25V 100000PF Z
CX116	24100104	CERAMIC CHIP, 25V 100000PF Z
CX117	24100104	CERAMIC CHIP, 25V 100000PF Z
CX118	24794100	ELECTROLYTIC, 16V 10UF M
CX119	24794100	ELECTROLYTIC, 16V 10UF M
CX120	24794100	ELECTROLYTIC, 16V 10UF M
CX121	24105221	CERAMIC CHIP CC73CH 50V 220PF J
CX122	24100104	CERAMIC CHIP, 25V 100000PF Z
CX123	24100104	CERAMIC CHIP, 25V 100000PF Z
CX124	24100104	CERAMIC CHIP, 25V 100000PF Z
CX125	24794100	ELECTROLYTIC, 16V 10UF M
CX126	24100104	CERAMIC CHIP, 25V 100000PF Z
CX128	24092538	CERAMIC CHIP, 10V F 1UF Z
CX129	24100104	CERAMIC CHIP, 25V 100000PF Z
CX143	24085981	ELEC. NONPOLAR CE04J 16V 10UF M 11L NP
CX145	24100104	CERAMIC CHIP, 25V 100000PF Z
CX148	24105101	CERAMIC CHIP, 50V CH 100PF J
CX149	24105470	CERAMIC CHIP, 50V CH 47PF J
CX150	24105271	CERAMIC CHIP, 50V CH 270PF J
CX151	24100104	CERAMIC CHIP, 25V 100000PF Z
CX152	24794100	ELECTROLYTIC, 16V 10UF M
CX155	24100104	CERAMIC CHIP, 25V 100000PF Z
CX156	24794100	ELECTROLYTIC, 16V 10UF M
CX157	24100104	CERAMIC CHIP, 25V 100000PF Z
CX159	24092538	CERAMIC CHIP, 10V F 1UF Z
CX160	24100104	CERAMIC CHIP, 25V 100000PF Z
CX163	24085981	ELEC. NONPOLAR CE04J 16V 10UF M 11L NP
CX165	24100104	CERAMIC CHIP, 25V 100000PF Z
CX168	24105101	CERAMIC CHIP, 50V CH 100PF J
CX169	24105470	CERAMIC CHIP, 50V CH 47PF J
CX170	24105271	CERAMIC CHIP, 50V CH 270PF J
CX171	24100104	CERAMIC CHIP, 25V 100000PF Z
CX172	24794100	ELECTROLYTIC, 16V 10UF M
CX176	24794100	ELECTROLYTIC, 16V 10UF M
CX177	24100104	CERAMIC CHIP, 25V 100000PF Z

Location No.	Parts No.	Description
CX179	24092538	CERAMIC CHIP, 10V F 1UF Z
CX180	24100104	CERAMIC CHIP, 25V 100000PF Z
CX184	24100104	CERAMIC CHIP, 25V 100000PF Z
CX185	24100104	CERAMIC CHIP, 25V 100000PF Z
CX186	24100104	CERAMIC CHIP, 25V 100000PF Z
CX187	24794100	ELECTROLYTIC, 16V 10UF M
CX188	24794100	ELECTROLYTIC, 16V 10UF M
CX189	24794100	ELECTROLYTIC, 16V 10UF M
CX190	24105330	CERAMIC CHIP, 50V CH 33PF J
CX191	24100104	CERAMIC CHIP, 25V 100000PF Z
CX192	24100104	CERAMIC CHIP, 25V 100000PF Z
CX193	24100104	CERAMIC CHIP, 25V 100000PF Z
CX201	24100104	CERAMIC CHIP, 25V 100000PF Z
CX202	24100104	CERAMIC CHIP, 25V 100000PF Z
CX204	24100104	CERAMIC CHIP, 25V 100000PF Z
CX205	24100104	CERAMIC CHIP, 25V 100000PF Z
CX206	24100104	CERAMIC CHIP, 25V 100000PF Z
CX208	24100104	CERAMIC CHIP, 25V 100000PF Z
CX209	24100104	CERAMIC CHIP, 25V 100000PF Z
CX211	24100104	CERAMIC CHIP, 25V 100000PF Z
CX212	24100104	CERAMIC CHIP, 25V 100000PF Z
CX214	24100104	CERAMIC CHIP, 25V 100000PF Z
CX215	24100104	CERAMIC CHIP, 25V 100000PF Z
CX216	24100104	CERAMIC CHIP, 25V 100000PF Z
CX218	24794221	ELECTROIYTIC CE04G 16V 220UF M
CX221	24100104	CERAMIC CHIP, 25V 100000PF Z
CX222	24100104	CERAMIC CHIP, 25V 100000PF Z
CX224	24100104	CERAMIC CHIP, 25V 100000PF Z
CX225	24794220	ELECTROLYTIC CE04G 16V 22UF M
CX226	24794101	ELECTROLYTIC, 16V 100UF M
CX227	24100104	CERAMIC CHIP, 25V 100000PF Z
CX228	24100104	CERAMIC CHIP, 25V 100000PF Z
CX230	24100104	CERAMIC CHIP, 25V 100000PF Z
CX231	24100104	CERAMIC CHIP, 25V 100000PF Z
CX232	24100104	CERAMIC CHIP, 25V 100000PF Z
CX234	24100104	CERAMIC CHIP, 25V 100000PF Z
CX235	24797229	ELECTROLYTIC, 50V 2.2UF M
CX236	24794101	ELECTROLYTIC, 16V 100UF M
CX237	24100104	CERAMIC CHIP, 25V 100000PF Z
CX238	24100104	CERAMIC CHIP, 25V 100000PF Z
CX239	24100104	CERAMIC CHIP, 25V 100000PF Z
CX240	24100104	CERAMIC CHIP, 25V 100000PF Z
CX261	24100104	CERAMIC CHIP, 25V 100000PF Z
CX262	24105470	CERAMIC CHIP, 50V CH 47PF J
CX271	24100104	CERAMIC CHIP, 25V 100000PF Z
CX301	24794100	ELECTROLYTIC, 16V 10UF M
CX302	24100104	CERAMIC CHIP, 25V 100000PF Z
CX303	24100104	CERAMIC CHIP, 25V 100000PF Z
CX305	24100104	CERAMIC CHIP, 25V 100000PF Z
CX306	24100104	CERAMIC CHIP, 25V 100000PF Z
CX308	24100104	CERAMIC CHIP, 25V 100000PF Z
CX309	24100104	CERAMIC CHIP, 25V 100000PF Z
CX310	24100104	CERAMIC CHIP, 25V 100000PF Z
CX321	24794100	ELECTROLYTIC, 16V 10UF M
CX323	24100104	CERAMIC CHIP, 25V 100000PF Z
CX326	24105680	CERAMIC CHIP CC73CH 50V 68PF J
CX328	24105330	CERAMIC CHIP, 50V CH 33PF J
CX330	24794470	ELECTORLYTIC, 16V 47UF M
CX341	24794100	ELECTROLYTIC, 16V 10UF M
CX343	24100104	CERAMIC CHIP, 25V 100000PF Z
CX346	24105181	CERAMIC CHIP CC73CH 50V 180PF J
CX348	24105181	CERAMIC CHIP CC73CH 50V 180PF J
CX361	24794100	ELECTROLYTIC, 16V 10UF M
CX363	24100104	CERAMIC CHIP, 25V 100000PF Z
CX366	24105181	CERAMIC CHIP CC73CH 50V 180PF J

Location No.	Parts No.	Description
CX368	24105181	CERAMIC CHIP CC73CH 50V 180PF J
CX401	24100104	CERAMIC CHIP, 25V 100000PF Z
CX402	24100104	CERAMIC CHIP, 25V 100000PF Z
CX403	24100104	CERAMIC CHIP, 25V 100000PF Z
CX404	24100104	CERAMIC CHIP, 25V 100000PF Z
CX405	24794471	ELECTROLYTIC, 16V 470UF M
CX406	24794471	ELECTROLYTIC, 16V 470UF M
CX407	24105220	CERAMIC CHIP, 50V CH 22PF J
CX408	24105220	CERAMIC CHIP, 50V CH 22PF J
CX409	24105220	CERAMIC CHIP, 50V CH 22PF J
CX410	24105220	CERAMIC CHIP, 50V CH 22PF J
CX411	24105220	CERAMIC CHIP, 50V CH 22PF J
CX412	24105220	CERAMIC CHIP, 50V CH 22PF J
CX421	24105221	CERAMIC CHIP CC73CH 50V 220PF J
CX422	24105221	CERAMIC CHIP CC73CH 50V 220PF J
CX423	24105221	CERAMIC CHIP CC73CH 50V 220PF J
CX424	24105221	CERAMIC CHIP CC73CH 50V 220PF J
CX425	24105221	CERAMIC CHIP CC73CH 50V 220PF J
CX426	24105330	CERAMIC CHIP, 50V CH 33PF J
CX427	24105221	CERAMIC CHIP CC73CH 50V 220PF J
CX428	24105330	CERAMIC CHIP, 50V CH 33PF J
CX429	24105330	CERAMIC CHIP, 50V CH 33PF J
CX430	24105221	CERAMIC CHIP CC73CH 50V 220PF J
CX431	24073020	ELECTROLYTIC CE04P 10V 1000UF M 3A
CX432	24092742	CERAMIC CHIP, 10V F 0.33UF Z
CX433	24100104	CERAMIC CHIP, 25V 100000PF Z
CX434	24092734	CERRMIC CHIP CK73F 16V 220000PF Z
CX435	24100104	CERAMIC CHIP, 25V 100000PF Z
CX436	24073035	ELECTROLYTIC CE04P 16V 22UF M 3A
CX601	24794470	ELECTORLYTIC, 16V 47UF M
CX602	24100104	CERAMIC CHIP, 25V 100000PF Z
CX603	24100104	CERAMIC CHIP, 25V 100000PF Z
CX604	24100104	CERAMIC CHIP, 25V 100000PF Z
CX605	24100104	CERAMIC CHIP, 25V 100000PF Z
CX606	24100104	CERAMIC CHIP, 25V 100000PF Z
CX607	24100104	CERAMIC CHIP, 25V 100000PF Z
CX611	24794470	ELECTORLYTIC, 16V 47UF M
CX612	24100104	CERAMIC CHIP, 25V 100000PF Z
CX613	24100104	CERAMIC CHIP, 25V 100000PF Z
CX614	24100104	CERAMIC CHIP, 25V 100000PF Z
CX615	24100104	CERAMIC CHIP, 25V 100000PF Z
CX616	24100104	CERAMIC CHIP, 25V 100000PF Z
CX617	24100104	CERAMIC CHIP, 25V 100000PF Z
CX621	24100104	CERAMIC CHIP, 25V 100000PF Z
CX622	24105330	CERAMIC CHIP, 50V CH 33PF J
CZ01	24100104	CERAMIC CHIP, 25V 100000PF Z
CZ02	24109103	CERAMIC CHIP CK73B 50V 10000PF K
CZ03	24092538	CERAMIC CHIP, 10V F 1UF Z
CZ04	24100104	CERAMIC CHIP, 25V 100000PF Z
CZ05	24109103	CERAMIC CHIP CK73B 50V 10000PF K
CZ06	24100104	CERAMIC CHIP, 25V 100000PF Z
CZ07	24100104	CERAMIC CHIP, 25V 100000PF Z
CZ08	24100104	CERAMIC CHIP, 25V 100000PF Z
CZ09	24105220	CERAMIC CHIP, 50V CH 22PF J
CZ10	24105100	CERAMIC CHIP CC73CH 50V 10PF D
CZ11	24105220	CERAMIC CHIP, 50V CH 22PF J
CZ12	24109103	CERAMIC CHIP CK73B 50V 10000PF K
CZ13	24109103	CERAMIC CHIP CK73B 50V 10000PF K
CZ14	24794101	ELECTROLYTIC, 16V 100UF M
CZ15	24109103	CERAMIC CHIP CK73B 50V 10000PF K
CZ16	24100104	CERAMIC CHIP, 25V 100000PF Z
CZ17	24109103	CERAMIC CHIP CK73B 50V 10000PF K
CZ19	24105681	CERAMIC CHIP, 50V 680PF J
CZ20	24092730	CERAMIC CHIP, 16V 0.1UF K
CZ21	24105102	CERAMIC CHIP CC73CH 25V 1000PF J

Location No.	Parts No.	Description
CZ22	24794100	ELECTROLYTIC, 16V 10UF M
CZ23	24109103	CERAMIC CHIP CK73B 50V 10000PF K
CZ24	24109103	CERAMIC CHIP CK73B 50V 10000PF K
CZ25	24794100	ELECTROLYTIC, 16V 10UF M
CZ26	24109103	CERAMIC CHIP CK73B 50V 10000PF K
CZ28	24109103	CERAMIC CHIP CK73B 50V 10000PF K
CZ29	24109103	CERAMIC CHIP CK73B 50V 10000PF K
CZ30	24794101	ELECTROLYTIC, 16V 100UF M
CZ31	24100104	CERAMIC CHIP, 25V 100000PF Z
CZ32	24105470	CERAMIC CHIP, 50V CH 47PF J
CZ33	24105330	CERAMIC CHIP, 50V CH 33PF J
CZ34	24105101	CERAMIC CHIP, 50V CH 100PF J
CZ35	24105270	CERAMIC CHIP, 50V CH 27PF J
RESISTORS		
R229	24011472	METAL FILM CHIP 1/20W 4.7K J
R231	24011222	CHIP, METAL FILM, 1/20W 2.2K OHM J
R235	24011222	CHIP, METAL FILM, 1/20W 2.2K OHM J
R236	24011101	CHIP, METAL FILM, 1/20W 100 OHM J
R237	24011101	CHIP, METAL FILM, 1/20W 100 OHM J
R238	24011682	METAL FILM CHIP 1/20W 6.8K J
R241	24367473	CARBON FILM, 1/6W 47K OHM G
R242	24367153	CARBON FILM, 1/6W 15K OHM G
R243	24367333	CARBON FILM, 1/6W 33K OHM G
R244	24366823	CARBON FILM, 1/6W 82K OHM J
R245	24366123	CARBON FILM, 1/6W 12K OHM J
R245	24011104	CHIP, METAL FILM, 1/20W 100K OHM J
R246	24366103	CARBON FILM, 1/6W 10K OHM J
R247	24366102	CARBON FILM, 1/6W 1K OHM J
R271	24011103	CHIP, METAL FILM, 1/20W 10K OHM J
R272	24011103	CHIP, METAL FILM, 1/20W 10K OHM J
R301	24011103	CHIP, METAL FILM, 1/20W 10K OHM J
R302	24011101	CHIP, METAL FILM, 1/20W 100 OHM J
R303	24011103	CHIP, METAL FILM, 1/20W 10K OHM J
R304	24011103	CHIP, METAL FILM, 1/20W 10K OHM J
R305	24322828	OXIDE METAL FILM, 1W 0.82 OHM J
R306	24011123	CHIP, METAL FILM, 1/20W 12K OHM J
R307	24011101	CHIP, METAL FILM, 1/20W 100 OHM J
R308	24011101	CHIP, METAL FILM, 1/20W 100 OHM J
R310	24011562	METAL FILM CHIP 1/20W 5.6K J
R312	24011103	CHIP, METAL FILM, 1/20W 10K OHM J
R314	24011473	METAL FILM CHIP 1/20W 47K J
R315	24011821	METAL FILM CHIP 1/20W 820 J
R316	24011102	CHIP, METAL FILM, 1/20W 1K OHM J
R319	24011153	CHIP, METAL FILM, 1/2OW 15K OHM J
R320	24000249	METAL FILM, 1/4W 47K OHM F
R321	24011472	METAL FILM CHIP 1/20W 4.7K J
R322	24000637	METAL FILM, 1/4W 15K OHM F
R323	24000631	METAL FILM 1/4W 8.2K F
R324	24011103	CHIP, METAL FILM, 1/20W 10K OHM J
R325	24011472	METAL FILM CHIP 1/20W 4.7K J
R326	24011103	CHIP, METAL FILM, 1/20W 10K OHM J
R327	24011103	CHIP, METAL FILM, 1/20W 10K OHM J
R328	24000633	METAL FILM, 1/4W 10K OHM F
R329	24011103	CHIP, METAL FILM, 1/20W 10K OHM J
R330	24000221	METAL FILM, 1/4W 20K OHM F
R331	24019119	METAL FILM, 1/6W 30K OHM J
R332	24000525	METAL FILM, 1/4W 4.7K OHM F
R333	24011103	CHIP, METAL FILM, 1/20W 10K OHM J
R334	24011102	CHIP, METAL FILM, 1/20W 1K OHM J
R335	24011102	CHIP, METAL FILM, 1/20W 1K OHM J
R336	24011102	CHIP, METAL FILM, 1/20W 1K OHM J
R337	24321129	OXIDE METAL FILM, 1/2W 1.2 OHM J
R338	24011123	CHIP, METAL FILM, 1/20W 12K OHM J
R339	24011393	CHIP, METAL FILM, 1/20W 39K OHM J

Location No.	Parts No.	Description
R340	24011824	METAL FILM CHIP 1/20W 820K J
R341	24011273	METAL FILM CHIP 1/20W 27K J
R342	24011822	METAL FILM CHIP 1/20W 8.2K J
R343	24011102	CHIP, METAL FILM, 1/20W 1K OHM J
R344	24382271	OXIDE METAL FILM, 1W 270 OHM J
R346	24382391	OXIDE METAL FILM, 1W 390 OHM J
R347	24011103	CHIP, METAL FILM, 1/20W 10K OHM J
R348	24011103	CHIP, METAL FILM, 1/20W 10K OHM J
R349	24011392	METAL FILM CHIP 1/20W 3.9K J
R350	24011822	METAL FILM CHIP 1/20W 8.2K J
R355	24011223	METAL FILM CHIP 1/20W 22K J
R359	24011102	CHIP, METAL FILM, 1/20W 1K OHM J
R360	24011103	CHIP, METAL FILM, 1/20W 10K OHM J
R362	24011153	CHIP, METAL FILM, 1/2OW 15K OHM J
R363	24011472	METAL FILM CHIP 1/20W 4.7K J
R364	24011102	CHIP, METAL FILM, 1/20W 1K OHM J
R365	24011222	CHIP, METAL FILM, 1/20W 2.2K OHM J
R370	24011102	CHIP, METAL FILM, 1/20W 1K OHM J
R371	24011823	METAL FILM CHIP 1/20W 82K J
R372	24011332	METAL FILM CHIP 1/20W 3.3K J
R373	24011823	METAL FILM CHIP 1/20W 82K J
R374	24011104	CHIP, METAL FILM, 1/20W 100K OHM J
R375	24011153	CHIP, METAL FILM, 1/2OW 15K OHM J
R376	24011333	METAL FILM CHIP 1/20W 33K J
R377	24011102	CHIP, METAL FILM, 1/20W 1K OHM J
R378	24011332	METAL FILM CHIP 1/20W 3.3K J
R382	24011472	METAL FILM CHIP 1/20W 4.7K J
R383	24011102	CHIP, METAL FILM, 1/20W 1K OHM J
R384	24011222	CHIP, METAL FILM, 1/20W 2.2K OHM J
R390	24382561	OXIDE METAL FILM, 1W 560 OHM J
R391	24382561	OXIDE METAL FILM, 1W 560 OHM J
R392	24382561	OXIDE METAL FILM, 1W 560 OHM J
R403	24382101	OXIDE METAL FILM, 1W 100 OHM J
R404	24366332	CARBON FILM, 1/6W 3.3K OHM J
R405	24011101	CHIP, METAL FILM, 1/20W 100 OHM J
R406	24382222	OXIDE METAL FILM, 1W 2.2K OHM J
R407	24381100	OXIDE METAL FILM, 1/2W 10 OHM J
R409	24555220	OXIDE RES B 3W 220J
R410	24555220	OXIDE RES B 3W 220J
R411	24323479	METAL FILM, 2W 4.7 OHM J
R412	24383223	OXIDE METAL FILM, 2W 22K OHM J
R413	24011101	CHIP, METAL FILM, 1/20W 100 OHM J
R414	24019259	FUSIBLE, 1/4W 27 OHM G
R415	24011102	CHIP, METAL FILM, 1/20W 1K OHM J
R416	24383121	OXIDE METAL FILM, 1/2W 120 OHM J
R418	24382104	OXIDE METAL FILM, 1W 100K OHM J
R419	24942102	CARBON COMPOSITION, 1/2W 1K OHM J
R420	24011103	CHIP, METAL FILM, 1/20W 10K OHM J
R421	24366223	CARBON FILM, 1/6W 22K OHM J
R422	24366223	CARBON FILM, 1/6W 22K OHM J
R431	24383102	OXIDE METAL FILM, 2W 1K OHM J
R432	24376274	RESISTOR CARBON B 1/2W 274J
R433	24376274	RESISTOR CARBON B 1/2W 274J
R434	24376274	RESISTOR CARBON B 1/2W 274J
R435	24011472	METAL FILM CHIP 1/20W 4.7K J
R441	24533331	FUSIBLE, 2W 330 OHM J
R443	24988011	METAL FILM, 1/2W 1 OHM J
R444	24322398	OXIDE METAL FILM, 1W 0.39 OHM J
R446	24366153	CARBON FILM, 1/6W 15K OHM J
R447	24382473	OXIDE METAL FILM, 1W 47K OHM J
R448	24011103	CHIP, METAL FILM, 1/20W 10K OHM J
R449	24011152	CHIP, METAL FILM, 1/20W 1.5K OHM J
R460	24011103	CHIP, METAL FILM, 1/20W 10K OHM J
R461	24011103	CHIP, METAL FILM, 1/20W 10K OHM J
R462	24011103	CHIP, METAL FILM, 1/20W 10K OHM J

Location No.	Parts No.	Description
R463	24011103	CHIP, METAL FILM, 1/20W 10K OHM J
R464	24011472	METAL FILM CHIP 1/20W 4.7K J
R465	24011474	CHIP, METAL FILM, 1/20W 470K OHM J
R466	24011103	CHIP, METAL FILM, 1/20W 10K OHM J
R467	24011823	METAL FILM CHIP 1/20W 82K J
R469	24011101	CHIP, METAL FILM, 1/20W 100 OHM J
R470	24011224	METAL FILM CHIP 1/20W 220K J
R472	24366151	CARBON FILM, 1/6W 150 OHM J
R473	24000362	METAL FILM 1/4W 1.5K F
R474	24000370	METAL FILM 1/4W 3.3K F
R475	24366103	CARBON FILM, 1/6W 10K OHM J
R476	24000137	METAL FILM, 1/4W 150 OHM F
R477	24000147	METAL FILM, 1/4W 470 OHM F
R480	24011223	METAL FILM CHIP 1/20W 22K J
R481	24011103	CHIP, METAL FILM, 1/20W 10K OHM J
R482	24011223	METAL FILM CHIP 1/20W 22K J
R483	24011332	METAL FILM CHIP 1/20W 3.3K J
R484	24011474	CHIP, METAL FILM, 1/20W 470K OHM J
R485	24011103	CHIP, METAL FILM, 1/20W 10K OHM J
R486	24011103	CHIP, METAL FILM, 1/20W 10K OHM J
R488	24011392	METAL FILM CHIP 1/20W 3.9K J
R489	24011222	CHIP, METAL FILM, 1/20W 2.2K OHM J
R490	24552331	OXIDE METAL FILM, 1/2W 330 OHM J
R491	24011472	METAL FILM CHIP 1/20W 4.7K J
R501	24011682	METAL FILM CHIP 1/20W 6.8K J
R502	24011272	METAL FILM CHIP 1/20W 2.7K J
R504	24011101	CHIP, METAL FILM, 1/20W 100 OHM J
R505	24011101	CHIP, METAL FILM, 1/20W 100 OHM J
R506	24011273	METAL FILM CHIP 1/20W 27K J
R507	24011392	METAL FILM CHIP 1/20W 3.9K J
R508	24011682	METAL FILM CHIP 1/20W 6.8K J
R511	24011102	CHIP, METAL FILM, 1/20W 1K OHM J
R512	24011102	CHIP, METAL FILM, 1/20W 1K OHM J
R513	24366101	CARBON FILM, 1/6W 100 OHM J
R513	24011103	CHIP, METAL FILM, 1/20W 10K OHM J
R514	24011102	CHIP, METAL FILM, 1/20W 1K OHM J
R515	24366103	CARBON FILM, 1/6W 10K OHM J
R515	24011102	CHIP, METAL FILM, 1/20W 1K OHM J
R516	24011102	CHIP, METAL FILM, 1/20W 1K OHM J
R517	24011102	CHIP, METAL FILM, 1/20W 1K OHM J
R518	24011102	CHIP, METAL FILM, 1/20W 1K OHM J
R519	24011472	METAL FILM CHIP 1/20W 4.7K J
R520	24366681	CARBON FILM, 1/6W 680 OHM J
R543	24011681	METAL FILM CHIP 1/20W 680 J
R548	24011681	METAL FILM CHIP 1/20W 680 J
R552	24011101	CHIP, METAL FILM, 1/20W 100 OHM J
R553	24011681	METAL FILM CHIP 1/20W 680 J
R554	24011101	CHIP, METAL FILM, 1/20W 100 OHM J
R555	24011101	CHIP, METAL FILM, 1/20W 100 OHM J
R561	24552181	OXIDE METAL FILM, 1/2W 180 OHM J
R569	24011224	METAL FILM CHIP 1/20W 220K J
R570	24011471	METAL FILM CHIP 1/20W 470 J
R571	24011471	METAL FILM CHIP 1/20W 470 J
R572	24011470	METAL FILM CHIP 1/20W 47 J
R573	24011332	METAL FILM CHIP 1/20W 3.3K J
R574	24011471	METAL FILM CHIP 1/20W 470 J
R575	24011331	METAL FILM CHIP 1/20W 330 J
R576	24011331	METAL FILM CHIP 1/20W 330 J
R577	24011332	METAL FILM CHIP 1/20W 3.3K J
R578	24011102	CHIP, METAL FILM, 1/20W 1K OHM J
R579	24011471	METAL FILM CHIP 1/20W 470 J
R580	24011680	METAL FILM CHIP 1/20W 68 J
R581	24011332	METAL FILM CHIP 1/20W 3.3K J
R582	24011102	CHIP, METAL FILM, 1/20W 1K OHM J
R583	24011331	METAL FILM CHIP 1/20W 330 J

Location No.	Parts No.	Description
R584	24011101	CHIP, METAL FILM, 1/20W 100 OHM J
R585	24011101	CHIP, METAL FILM, 1/20W 100 OHM J
R586	24011331	METAL FILM CHIP 1/20W 330 J
R587	24011102	CHIP, METAL FILM, 1/20W 1K OHM J
R588	24011101	CHIP, METAL FILM, 1/20W 100 OHM J
R589	24011332	METAL FILM CHIP 1/20W 3.3K J
R590	24011102	CHIP, METAL FILM, 1/20W 1K OHM J
R591	24011101	CHIP, METAL FILM, 1/20W 100 OHM J
R601	24011222	CHIP, METAL FILM, 1/20W 2.2K OHM J
R602	24011222	CHIP, METAL FILM, 1/20W 2.2K OHM J
R603	24011122	CHIP, METAL FILM, 1/20W 1.2K OHM J
R604	24011122	CHIP, METAL FILM, 1/20W 1.2K OHM J
R605	24011123	CHIP, METAL FILM, 1/20W 12K OHM J
R606	24011123	CHIP, METAL FILM, 1/20W 12K OHM J
R607	24011223	METAL FILM CHIP 1/20W 22K J
R608	24011223	METAL FILM CHIP 1/20W 22K J
R609	24366229	CARBON FILM, 1/6W 2.2 OHM J
R610	24366229	CARBON FILM, 1/6W 2.2 OHM J
R611	24011104	CHIP, METAL FILM, 1/20W 100K OHM J
R612	24011223	METAL FILM CHIP 1/20W 22K J
R613	24011223	METAL FILM CHIP 1/20W 22K J
R614	24011223	METAL FILM CHIP 1/20W 22K J
R615	24011103	CHIP, METAL FILM, 1/20W 10K OHM J
R616	24011103	CHIP, METAL FILM, 1/20W 10K OHM J
R617	24011104	CHIP, METAL FILM, 1/20W 100K OHM J
R618	24011103	CHIP, METAL FILM, 1/20W 10K OHM J
R619	24011224	METAL FILM CHIP 1/20W 220K J
R620	24552122	OXIDE METAL FILM, 1/2W 1.2K OHM J
R621	24011153	CHIP, METAL FILM, 1/2OW 15K OHM J
R622	24011153	CHIP, METAL FILM, 1/2OW 15K OHM J
R623	24011562	METAL FILM CHIP 1/20W 5.6K J
R624	24011101	CHIP, METAL FILM, 1/20W 100 OHM J
R625	24011681	METAL FILM CHIP 1/20W 680 J
R626	24011223	METAL FILM CHIP 1/20W 22K J
R627	24011562	METAL FILM CHIP 1/20W 5.6K J
R628	24011472	METAL FILM CHIP 1/20W 4.7K J
R629	24011101	CHIP, METAL FILM, 1/20W 100 OHM J
R630	24011472	METAL FILM CHIP 1/20W 4.7K J
R631	24011332	METAL FILM CHIP 1/20W 3.3K J
R632	24011223	METAL FILM CHIP 1/20W 22K J
R633	24011221	METAL FILM CHIP 1/20W 220 J
R634	24011273	METAL FILM CHIP 1/20W 27K J
R635	24011562	METAL FILM CHIP 1/20W 5.6K J
R636	24872822	CHIP, METAL FILM, 1/16W 8.2K OHM J
R637	24872822	CHIP, METAL FILM, 1/16W 8.2K OHM J
R638	24011222	CHIP, METAL FILM, 1/20W 2.2K OHM J
R639	24011153	CHIP, METAL FILM, 1/2OW 15K OHM J
R640	24011103	CHIP, METAL FILM, 1/20W 10K OHM J
R641	24011103	CHIP, METAL FILM, 1/20W 10K OHM J
R642	24011102	CHIP, METAL FILM, 1/20W 1K OHM J
R643	24011103	CHIP, METAL FILM, 1/20W 10K OHM J
R644	24011473	METAL FILM CHIP 1/20W 47K J
R645	24011104	CHIP, METAL FILM, 1/20W 100K OHM J
R646	24872822	CHIP, METAL FILM, 1/16W 8.2K OHM J
R647	24872822	CHIP, METAL FILM, 1/16W 8.2K OHM J
R651	24011122	CHIP, METAL FILM, 1/20W 1.2K OHM J
R652	24011122	CHIP, METAL FILM, 1/20W 1.2K OHM J
R653	24011562	METAL FILM CHIP 1/20W 5.6K J
R654	24011562	METAL FILM CHIP 1/20W 5.6K J
R655	24011223	METAL FILM CHIP 1/20W 22K J
R656	24011223	METAL FILM CHIP 1/20W 22K J
R657	24011473	METAL FILM CHIP 1/20W 47K J
R658	24366229	CARBON FILM, 1/6W 2.2 OHM J
R659	24366229	CARBON FILM, 1/6W 2.2 OHM J
R660	24011333	METAL FILM CHIP 1/20W 33K J

Location No.	Parts No.	Description
R661	24011223	METAL FILM CHIP 1/20W 22K J
R662	24011473	METAL FILM CHIP 1/20W 47K J
R663	24011103	CHIP, METAL FILM, 1/20W 10K OHM J
R664	24011223	METAL FILM CHIP 1/20W 22K J
R665	24011473	METAL FILM CHIP 1/20W 47K J
R666	24366229	CARBON FILM, 1/6W 2.2 OHM J
R667	24366229	CARBON FILM, 1/6W 2.2 OHM J
R671	24366102	CARBON FILM, 1/6W 1K OHM J
R672	24366102	CARBON FILM, 1/6W 1K OHM J
R673	24366102	CARBON FILM, 1/6W 1K OHM J
R675	24366102	CARBON FILM, 1/6W 1K OHM J
R682	24366102	CARBON FILM, 1/6W 1K OHM J
R683	24366102	CARBON FILM, 1/6W 1K OHM J
R688	24552391	OXIDE METAL FILM, 1/2W 390 OHM J
R690	24552391	OXIDE METAL FILM, 1/2W 390 OHM J
R702	24552221	OXIDE METAL FILM, 1/2W 220 OHM J
R709	24366563	CARBON FILM, 1/6W 56K OHM J
R713	24366273	CARBON FILM, 1/6W 27K OHM J
R715	24366333	CARBON FILM, 1/6W 33K OHM J
R716	24366273	CARBON FILM, 1/6W 27K OHM J
R717	24366333	CARBON FILM, 1/6W 33K OHM J
R718	24366101	CARBON FILM, 1/6W 100 OHM J
R719	24366100	CARBON FILM, 1/6W 10 OHM J
R720	24552331	OXIDE METAL FILM, 1/2W 330 OHM J
R722	24552471	OXIDE METAL FILM, 1/2W 470 OHM J
R723	24366101	CARBON FILM, 1/6W 100 OHM J
R724	24366151	CARBON FILM, 1/6W 150 OHM J
R725	24366152	CARBON FILM, 1/6W 1.5K OHM J
R730	24552100	OXIDE METAL FILM, 1/2W 10 OHM J
R731	24552331	OXIDE METAL FILM, 1/2W 330 OHM J
R732	24366470	CARBON FILM, 1/6W 47 OHM J
R733	24366683	CARBON FILM, 1/6W 68K OHM J
R734	24366470	CARBON FILM, 1/6W 47 OHM J
R735	24366683	CARBON FILM, 1/6W 68K OHM J
R736	24553330	OXIDE RES B 1W 330J
R737	24366751	CARBON FILM, 1/6W 750 OHM J
R738	24366102	CARBON FILM, 1/6W 1K OHM J
R739	24366751	CARBON FILM, 1/6W 750 OHM J
R740	24553330	OXIDE RES B 1W 330J
R741	24322229	OXIDE METAL FILM, 1W 2.2 OHM J
R742	24321229	OXIDE METAL FILM, 1/2W 2.2 OHM J
R743	24554221	OXIDE METAL FILM, 2W 220 OHM J
R744	24366122	CARBON FILM, 1/6W 1.2K OHM J
R745	24366122	CARBON FILM, 1/6W 1.2K OHM J
R761	24366273	CARBON FILM, 1/6W 27K OHM J
R762	24366563	CARBON FILM, 1/6W 56K OHM J
R763	24552331	OXIDE METAL FILM, 1/2W 330 OHM J
R764	24366470	CARBON FILM, 1/6W 47 OHM J
R765	24552100	OXIDE METAL FILM, 1/2W 10 OHM J
R766	24366470	CARBON FILM, 1/6W 47 OHM J
R767	24552221	OXIDE METAL FILM, 1/2W 220 OHM J
R768	24366751	CARBON FILM, 1/6W 750 OHM J
R769	24366122	CARBON FILM, 1/6W 1.2K OHM J
R770	24553330	OXIDE RES B 1W 330J
R771	24322229	OXIDE METAL FILM, 1W 2.2 OHM J
R772	24366683	CARBON FILM, 1/6W 68K OHM J
R773	24366683	CARBON FILM, 1/6W 68K OHM J
R774	24366751	CARBON FILM, 1/6W 750 OHM J
R775	24366122	CARBON FILM, 1/6W 1.2K OHM J
R776	24553330	OXIDE RES B 1W 330J
R777	24321229	OXIDE METAL FILM, 1/2W 2.2 OHM J
R778	24366102	CARBON FILM, 1/6W 1K OHM J
R779	24554221	OXIDE METAL FILM, 2W 220 OHM J
R781	24366273	CARBON FILM, 1/6W 27K OHM J
R782	24366563	CARBON FILM, 1/6W 56K OHM J

Location No.	Parts No.	Description
R783	24552221	OXIDE METAL FILM, 1/2W 220 OHM J
R784	24552100	OXIDE METAL FILM, 1/2W 10 OHM J
R785	24366470	CARBON FILM, 1/6W 47 OHM J
R786	24366751	CARBON FILM, 1/6W 750 OHM J
R787	24366122	CARBON FILM, 1/6W 1.2K OHM J
R788	24366683	CARBON FILM, 1/6W 68K OHM J
R789	24366683	CARBON FILM, 1/6W 68K OHM J
R790	24366751	CARBON FILM, 1/6W 750 OHM J
R791	24366122	CARBON FILM, 1/6W 1.2K OHM J
R792	24366102	CARBON FILM, 1/6W 1K OHM J
R793	24321229	OXIDE METAL FILM, 1/2W 2.2 OHM J
R794	24553330	OXIDE RES B 1W 330J
R795	24322229	OXIDE METAL FILM, 1W 2.2 OHM J
R796	24554221	OXIDE METAL FILM, 2W 220 OHM J
R797	24366470	CARBON FILM, 1/6W 47 OHM J
R798	24552331	OXIDE METAL FILM, 1/2W 330 OHM J
R799	24553330	OXIDE RES B 1W 330J
⚠ R801	24009954	METAL FILN, 1/2W 2.2M OHM J
R808	24552470	OXIDE METAL FILM, 1/2W 47 OHM J
R810	24007737	CERAMIC COVERED, 15W 2.2 OHM J
R812	24366333	CARBON FILM, 1/6W 33K OHM J
R813	24366152	CARBON FILM, 1/6W 1.5K OHM J
R814	24366101	CARBON FILM, 1/6W 100 OHM J
R815	24366102	CARBON FILM, 1/6W 1K OHM J
R816	24366562	CARBON FILM, 1/6W 5.6K OHM J
R817	24366681	CARBON FILM, 1/6W 680 OHM J
R818	24322279	METAL FILM 1W 2R7 J
R819	24019466	METAL PLATE RK99 2W R39 J
R820	24366103	CARBON FILM, 1/6W 10K OHM J
R821	24383683	OXIDE RES B 2W 683J
R822	24366684	CARBON FILM, 1/6W 680K OHM J
R823	24366564	CARBON FILM, 1/6W 560K OHM J
R824	24384683	METAL OXIDE FILM B 3W 68K J
R825	24382470	OXIDE FILM 1W 47 J
R826	24366102	CARBON FILM, 1/6W 1K OHM J
R827	24366102	CARBON FILM, 1/6W 1K OHM J
R828	24366102	CARBON FILM, 1/6W 1K OHM J
R829	24366222	CARBON FILM, 1/6W 2.2K OHM J
R830	24011472	METAL FILM CHIP 1/20W 4.7K J
R831	24011222	CHIP, METAL FILM, 1/20W 2.2K OHM J
R840	24366473	CARBON FILM, 1/6W 47K OHM J
R841	24366332	CARBON FILM, 1/6W 3.3K OHM J
R842	24366103	CARBON FILM, 1/6W 10K OHM J
R848	24366681	CARBON FILM, 1/6W 680 OHM J
R861	24384333	OXIDE METAL FILM, 3W 33K OHM J
R862	24321689	METAL FILM, 1/2W 6.8 OHM J
R864	24552102	OXIDE METAL FILM, 1/2W 1K OHM J
R865	24552390	OXIDE METAL FILM, 1/2W 39 OHM J
R867	24366273	CARBON FILM, 1/6W 27K OHM J
R868	24552100	OXIDE METAL FILM, 1/2W 10 OHM J
R869	24366479	CARBON FILM, 1/6W 4.7 OHM J
R870	24381151	OXIDE FILM 1/2W 150 J
R871	24382680	OXIDE FILM 1W 68 J
R880	24322568	OXIDE METAL FILM, 1W 0.56 OHM J
R881	24552121	OXIDE METAL FILM, 1/2W 120 OHM J
R882	24552271	OXIDE METAL FILM, 1/2W 270 OHM J
R883	24381682	OXIDE METAL FILM, 1/2W 6.8K OHM J
R884	24366102	CARBON FILM, 1/6W 1K OHM J
R890	24382333	OXIDE METAL FILM, 1W 33K OHM J
R891	24366152	CARBON FILM, 1/6W 1.5K OHM J
R892	24366101	CARBON FILM, 1/6W 100 OHM J
⚠ R899	24005007	METAL FILM, 1W 8.2M OHM J
R901	24366101	CARBON FILM, 1/6W 100 OHM J
R903	24942102	CARBON COMPOSITION, 1/2W 1K OHM J
R905	24366470	CARBON FILM, 1/6W 47 OHM J

Location No.	Parts No.	Description
R906	24366331	CARBON FILM, 1/6W 330 OHM J
R908	24366680	CARBON FILM, 1/6W 68 OHM J
R909	24366390	CARBON FILM, 1/6W 39 OHM J
R911	24366101	CARBON FILM, 1/6W 100 OHM J
R913	24942102	CARBON COMPOSITION, 1/2W 1K OHM J
R915	24366330	CARBON FILM, 1/6W 33 OHM J
R916	24366331	CARBON FILM, 1/6W 330 OHM J
R918	24366470	CARBON FILM, 1/6W 47 OHM J
R919	24366390	CARBON FILM, 1/6W 39 OHM J
R920	24366153	CARBON FILM, 1/6W 15K OHM J
R921	24366101	CARBON FILM, 1/6W 100 OHM J
R923	24942102	CARBON COMPOSITION, 1/2W 1K OHM J
R925	24366470	CARBON FILM, 1/6W 47 OHM J
R926	24366331	CARBON FILM, 1/6W 330 OHM J
R927	24366100	CARBON FILM, 1/6W 10 OHM J
R928	24366680	CARBON FILM, 1/6W 68 OHM J
R929	24366390	CARBON FILM, 1/6W 39 OHM J
R931	24383153	OXIDE METAL FILM, 2W 15K OHM J
R932	24383153	OXIDE METAL FILM, 2W 15K OHM J
R933	24000889	FUSE RES RN Z 1W 189J
R934	24321688	OXIDE METAL FILM, 1/2W 0.68 OHM J
R936	24383153	OXIDE METAL FILM, 2W 15K OHM J
R937	24383153	OXIDE METAL FILM, 2W 15K OHM J
R938	24366150	CARBON FILM, 1/6W 15 OHM J
R941	24554153	OXIDE METAL FILM, 2W 15K OHM J
R942	24554153	OXIDE METAL FILM, 2W 15K OHM J
R943	24554153	OXIDE METAL FILM, 2W 15K OHM J
R944	24383153	OXIDE METAL FILM, 2W 15K OHM J
R945	24366150	CARBON FILM, 1/6W 15 OHM J
R948	24366153	CARBON FILM, 1/6W 15K OHM J
R949	24366153	CARBON FILM, 1/6W 15K OHM J
R951	24554153	OXIDE METAL FILM, 2W 15K OHM J
R952	24554153	OXIDE METAL FILM, 2W 15K OHM J
R953	24554153	OXIDE METAL FILM, 2W 15K OHM J
R954	24383153	OXIDE METAL FILM, 2W 15K OHM J
R956	24366101	CARBON FILM, 1/6W 100 OHM J
R959	24366150	CARBON FILM, 1/6W 15 OHM J
R961	24366152	CARBON FILM, 1/6W 1.5K OHM J
R962	24366471	CARBON FILM, 1/6W 470 OHM J
R964	24366332	CARBON FILM, 1/6W 3.3K OHM J
R965	24366471	CARBON FILM, 1/6W 470 OHM J
R966	24366331	CARBON FILM, 1/6W 330 OHM J
R967	24366681	CARBON FILM, 1/6W 680 OHM J
R968	24366470	CARBON FILM, 1/6W 47 OHM J
R969	24366683	CARBON FILM, 1/6W 68K OHM J
R970	24366393	CARBON FILM, 1/6W 39K OHM J
R971	24367821	CARBON FILM, 1/6W 820 OHM G
R972	24367471	CARBON FILM, 1/6W 470 OHM G
R973	24367681	CARBON FILM, 1/6W 680 OHM G
R974	24367681	CARBON FILM, 1/6W 680 OHM G
R975	24366471	CARBON FILM, 1/6W 470 OHM J
R976	24367272	CARBON FILM, 1/6W 2.7K OHM J
R977	24367472	CARBON FILM, 1/6W 4.7K OHM G
R978	24367391	CARBON FILM, 1/6W 390 OHM G
R983	24366681	CARBON FILM, 1/6W 680 OHM J
R984	24366821	CARBON FILM, 1/6W 820 OHM J
R985	24366821	CARBON FILM, 1/6W 820 OHM J
R986	24366821	CARBON FILM, 1/6W 820 OHM J
R987	24366470	CARBON FILM, 1/6W 47 OHM J
R991	24366153	CARBON FILM, 1/6W 15K OHM J
R2020	24011101	CHIP, METAL FILM, 1/20W 100 OHM J
R2060	24366221	CARBON FILM, 1/6W 220 OHM J
R2104	24011332	METAL FILM CHIP 1/20W 3.3K J
R2105	24011101	CHIP, METAL FILM, 1/20W 100 OHM J
R2106	24011101	CHIP, METAL FILM, 1/20W 100 OHM J

Location No.	Parts No.	Description
R2107	24011101	CHIP, METAL FILM, 1/20W 100 OHM J
R2149	24871681	CHIP, METAL FILM, 1/8W 680 OHM J
R2150	24871681	CHIP, METAL FILM, 1/8W 680 OHM J
R2151	24871681	CHIP, METAL FILM, 1/8W 680 OHM J
R2152	24011101	CHIP, METAL FILM, 1/20W 100 OHM J
R2153	24011101	CHIP, METAL FILM, 1/20W 100 OHM J
R2154	24011101	CHIP, METAL FILM, 1/20W 100 OHM J
R2155	24871102	CHIP, METAL FILM, 1/8W 1K OHM J
R2156	24871102	CHIP, METAL FILM, 1/8W 1K OHM J
R2157	24871102	CHIP, METAL FILM, 1/8W 1K OHM J
R3407	24011682	METAL FILM CHIP 1/20W 6.8K J
R4401	24011472	METAL FILM CHIP 1/20W 4.7K J
R4402	24011223	METAL FILM CHIP 1/20W 22K J
R4403	24011471	METAL FILM CHIP 1/20W 470 J
R4404	24011222	CHIP, METAL FILM, 1/20W 2.2K OHM J
R4405	24011102	CHIP, METAL FILM, 1/20W 1K OHM J
R4406	24011102	CHIP, METAL FILM, 1/20W 1K OHM J
R4407	24011103	CHIP, METAL FILM, 1/20W 10K OHM J
R4408	24011223	METAL FILM CHIP 1/20W 22K J
R4409	24871472	CHIP, METAL FILM, 1/8W 4.7K OHM J
R4411	24011101	CHIP, METAL FILM, 1/20W 100 OHM J
R4412	24011101	CHIP, METAL FILM, 1/20W 100 OHM J
R4413	24011101	CHIP, METAL FILM, 1/20W 100 OHM J
R4451	24011472	METAL FILM CHIP 1/20W 4.7K J
R4452	24011103	CHIP, METAL FILM, 1/20W 10K OHM J
R4453	24011682	METAL FILM CHIP 1/20W 6.8K J
R4454	24011102	CHIP, METAL FILM, 1/20W 1K OHM J
R4455	24011472	METAL FILM CHIP 1/20W 4.7K J
R4460	24011473	METAL FILM CHIP 1/20W 47K J
R4461	24011473	METAL FILM CHIP 1/20W 47K J
R4462	24011332	METAL FILM CHIP 1/20W 3.3K J
R4463	24011102	CHIP, METAL FILM, 1/20W 1K OHM J
R5020	24011101	CHIP, METAL FILM, 1/20W 100 OHM J
R5030	24011101	CHIP, METAL FILM, 1/20W 100 OHM J
R7001	24011222	CHIP, METAL FILM, 1/20W 2.2K OHM J
R7002	24011223	METAL FILM CHIP 1/20W 22K J
R7003	24011472	METAL FILM CHIP 1/20W 4.7K J
R7004	24011103	CHIP, METAL FILM, 1/20W 10K OHM J
R7005	24011153	CHIP, METAL FILM, 1/2OW 15K OHM J
R7006	24011333	METAL FILM CHIP 1/20W 33K J
R7007	24011333	METAL FILM CHIP 1/20W 33K J
R7008	24011471	METAL FILM CHIP 1/20W 470 J
R7009	24011471	METAL FILM CHIP 1/20W 470 J
R7010	24366222	CARBON FILM, 1/6W 2.2K OHM J
R7011	24011151	CHIP, METAL FILM, 1/20W 150 OHM J
R7012	24011151	CHIP, METAL FILM, 1/20W 150 OHM J
R7013	24011470	METAL FILM CHIP 1/20W 47 J
R7014	24011471	METAL FILM CHIP 1/20W 470 J
R7015	24011471	METAL FILM CHIP 1/20W 470 J
R7016	24366101	CARBON FILM, 1/6W 100 OHM J
R7017	24011101	CHIP, METAL FILM, 1/20W 100 OHM J
R7018	24011101	CHIP, METAL FILM, 1/20W 100 OHM J
R7021	24383221	OXIDE METAL FILM, 2W 220 OHM J
R7022	24547159	FUSIBLE 1W 1R5 J
R7031	24366391	CARBON FILM, 1/6W 390 OHM J
R7032	24366222	CARBON FILM, 1/6W 2.2K OHM J
R7099	24011152	CHIP, METAL FILM, 1/20W 1.5K OHM J
R7101	24011222	CHIP, METAL FILM, 1/20W 2.2K OHM J
R7102	24011223	METAL FILM CHIP 1/20W 22K J
R7103	24011472	METAL FILM CHIP 1/20W 4.7K J
R7104	24011103	CHIP, METAL FILM, 1/20W 10K OHM J
R7105	24011153	CHIP, METAL FILM, 1/2OW 15K OHM J
R7106	24011333	METAL FILM CHIP 1/20W 33K J
R7107	24011333	METAL FILM CHIP 1/20W 33K J
R7108	24011471	METAL FILM CHIP 1/20W 470 J

Location No.	Parts No.	Description
R7109	24011471	METAL FILM CHIP 1/20W 470 J
R7111	24011151	CHIP, METAL FILM, 1/20W 150 OHM J
R7112	24011151	CHIP, METAL FILM, 1/20W 150 OHM J
R7113	24011470	METAL FILM CHIP 1/20W 47 J
R7114	24011471	METAL FILM CHIP 1/20W 470 J
R7115	24011471	METAL FILM CHIP 1/20W 470 J
R7116	24366101	CARBON FILM, 1/6W 100 OHM J
R7117	24011101	CHIP, METAL FILM, 1/20W 100 OHM J
R7118	24011101	CHIP, METAL FILM, 1/20W 100 OHM J
R7121	24383221	OXIDE METAL FILM, 2W 220 OHM J
R7122	24547159	FUSIBLE 1W 1R5 J
R7131	24366391	CARBON FILM, 1/6W 390 OHM J
R7199	24011152	CHIP, METAL FILM, 1/20W 1.5K OHM J
R7201	24011222	CHIP, METAL FILM, 1/20W 2.2K OHM J
R7202	24011223	METAL FILM CHIP 1/20W 22K J
R7203	24011472	METAL FILM CHIP 1/20W 4.7K J
R7204	24011103	CHIP, METAL FILM, 1/20W 10K OHM J
R7205	24011153	CHIP, METAL FILM, 1/2OW 15K OHM J
R7206	24011333	METAL FILM CHIP 1/20W 33K J
R7207	24011333	METAL FILM CHIP 1/20W 33K J
R7208	24011471	METAL FILM CHIP 1/20W 470 J
R7209	24011471	METAL FILM CHIP 1/20W 470 J
R7210	24366222	CARBON FILM, 1/6W 2.2K OHM J
R7211	24011151	CHIP, METAL FILM, 1/20W 150 OHM J
R7212	24011151	CHIP, METAL FILM, 1/20W 150 OHM J
R7213	24011470	METAL FILM CHIP 1/20W 47 J
R7214	24011471	METAL FILM CHIP 1/20W 470 J
R7215	24011471	METAL FILM CHIP 1/20W 470 J
R7216	24366101	CARBON FILM, 1/6W 100 OHM J
R7217	24011101	CHIP, METAL FILM, 1/20W 100 OHM J
R7218	24011101	CHIP, METAL FILM, 1/20W 100 OHM J
R7221	24383221	OXIDE METAL FILM, 2W 220 OHM J
R7222	24547159	FUSIBLE 1W 1R5 J
R7231	24366391	CARBON FILM, 1/6W 390 OHM J
R7232	24366222	CARBON FILM, 1/6W 2.2K OHM J
R7299	24011152	CHIP, METAL FILM, 1/20W 1.5K OHM J
R7301	24011222	CHIP, METAL FILM, 1/20W 2.2K OHM J
R7302	24011223	METAL FILM CHIP 1/20W 22K J
R7303	24011472	METAL FILM CHIP 1/20W 4.7K J
R7304	24011103	CHIP, METAL FILM, 1/20W 10K OHM J
R7305	24011153	CHIP, METAL FILM, 1/2OW 15K OHM J
R7306	24011333	METAL FILM CHIP 1/20W 33K J
R7307	24011333	METAL FILM CHIP 1/20W 33K J
R7308	24011471	METAL FILM CHIP 1/20W 470 J
R7309	24011471	METAL FILM CHIP 1/20W 470 J
R7311	24011151	CHIP, METAL FILM, 1/20W 150 OHM J
R7312	24011151	CHIP, METAL FILM, 1/20W 150 OHM J
R7313	24011470	METAL FILM CHIP 1/20W 47 J
R7314	24011471	METAL FILM CHIP 1/20W 470 J
R7315	24011471	METAL FILM CHIP 1/20W 470 J
R7316	24366101	CARBON FILM, 1/6W 100 OHM J
R7317	24011101	CHIP, METAL FILM, 1/20W 100 OHM J
R7318	24011101	CHIP, METAL FILM, 1/20W 100 OHM J
R7321	24383221	OXIDE METAL FILM, 2W 220 OHM J
R7322	24547159	FUSIBLE 1W 1R5 J
R7331	24366391	CARBON FILM, 1/6W 390 OHM J
R7399	24011152	CHIP, METAL FILM, 1/20W 1.5K OHM J
R7401	24011222	CHIP, METAL FILM, 1/20W 2.2K OHM J
R7402	24011223	METAL FILM CHIP 1/20W 22K J
R7403	24011472	METAL FILM CHIP 1/20W 4.7K J
R7404	24011103	CHIP, METAL FILM, 1/20W 10K OHM J
R7405	24011153	CHIP, METAL FILM, 1/2OW 15K OHM J
R7406	24011333	METAL FILM CHIP 1/20W 33K J
R7407	24011333	METAL FILM CHIP 1/20W 33K J
R7408	24011471	METAL FILM CHIP 1/20W 470 J

Location No.	Parts No.	Description
R7409	24011471	METAL FILM CHIP 1/20W 470 J
R7410	24366222	CARBON FILM, 1/6W 2.2K OHM J
R7411	24011151	CHIP, METAL FILM, 1/20W 150 OHM J
R7412	24011151	CHIP, METAL FILM, 1/20W 150 OHM J
R7413	24011470	METAL FILM CHIP 1/20W 47 J
R7414	24011471	METAL FILM CHIP 1/20W 470 J
R7415	24011471	METAL FILM CHIP 1/20W 470 J
R7416	24366101	CARBON FILM, 1/6W 100 OHM J
R7417	24011101	CHIP, METAL FILM, 1/20W 100 OHM J
R7418	24011101	CHIP, METAL FILM, 1/20W 100 OHM J
R7421	24383221	OXIDE METAL FILM, 2W 220 OHM J
R7422	24547159	FUSIBLE 1W 1R5 J
R7431	24366391	CARBON FILM, 1/6W 390 OHM J
R7432	24366222	CARBON FILM, 1/6W 2.2K OHM J
R7499	24011152	CHIP, METAL FILM, 1/20W 1.5K OHM J
R7501	24011222	CHIP, METAL FILM, 1/20W 2.2K OHM J
R7502	24011223	METAL FILM CHIP 1/20W 22K J
R7503	24011472	METAL FILM CHIP 1/20W 4.7K J
R7504	24011103	CHIP, METAL FILM, 1/20W 10K OHM J
R7505	24011153	CHIP, METAL FILM, 1/2OW 15K OHM J
R7506	24011333	METAL FILM CHIP 1/20W 33K J
R7507	24011333	METAL FILM CHIP 1/20W 33K J
R7508	24011471	METAL FILM CHIP 1/20W 470 J
R7509	24011471	METAL FILM CHIP 1/20W 470 J
R7511	24011151	CHIP, METAL FILM, 1/20W 150 OHM J
R7512	24011151	CHIP, METAL FILM, 1/20W 150 OHM J
R7513	24011470	METAL FILM CHIP 1/20W 47 J
R7514	24011471	METAL FILM CHIP 1/20W 470 J
R7515	24011471	METAL FILM CHIP 1/20W 470 J
R7516	24366101	CARBON FILM, 1/6W 100 OHM J
R7517	24011101	CHIP, METAL FILM, 1/20W 100 OHM J
R7518	24011101	CHIP, METAL FILM, 1/20W 100 OHM J
R7521	24383221	OXIDE METAL FILM, 2W 220 OHM J
R7522	24547159	FUSIBLE 1W 1R5 J
R7531	24366391	CARBON FILM, 1/6W 390 OHM J
R7599	24011152	CHIP, METAL FILM, 1/20W 1.5K OHM J
R7601	24011222	CHIP, METAL FILM, 1/20W 2.2K OHM J
R7602	24011222	CHIP, METAL FILM, 1/20W 2.2K OHM J
R7603	24381472	OXIDE METAL FILM, 1/2W 4.7K OHM J
R7604	24011104	CHIP, METAL FILM, 1/20W 100K OHM J
R7605	24366472	CARBON FILM, 1/6W 4.7K OHM J
R7606	24366102	CARBON FILM, 1/6W 1K OHM J
R7607	24381472	OXIDE METAL FILM, 1/2W 4.7K OHM J
R7608	24011223	METAL FILM CHIP 1/20W 22K J
R7609	24366153	CARBON FILM, 1/6W 15K OHM J
R7703	24011473	METAL FILM CHIP 1/20W 47K J
R7704	24011103	CHIP, METAL FILM, 1/20W 10K OHM J
R7705	24011472	METAL FILM CHIP 1/20W 4.7K J
R7706	24011222	CHIP, METAL FILM, 1/20W 2.2K OHM J
R7766	24011223	METAL FILM CHIP 1/20W 22K J
R7767	24011153	CHIP, METAL FILM, 1/2OW 15K OHM J
R7768	24011100	CHIP, METAL FILM, 1/20W 10 OHM J
R7773	24011224	METAL FILM CHIP 1/20W 220K J
R7779	24011102	CHIP, METAL FILM, 1/20W 1K OHM J
R7780	24011102	CHIP, METAL FILM, 1/20W 1K OHM J
R7781	24011333	METAL FILM CHIP 1/20W 33K J
R7794	24011223	METAL FILM CHIP 1/20W 22K J
R7832	24011221	METAL FILM CHIP 1/20W 220 J
R7833	24011103	CHIP, METAL FILM, 1/20W 10K OHM J
R7834	24011103	CHIP, METAL FILM, 1/20W 10K OHM J
R7835	24366222	CARBON FILM, 1/6W 2.2K OHM J
R7836	24366471	CARBON FILM, 1/6W 470 OHM J
R7837	24366101	CARBON FILM, 1/6W 100 OHM J
R7838	24011472	METAL FILM CHIP 1/20W 4.7K J
R7839	24011472	METAL FILM CHIP 1/20W 4.7K J

Location No.	Parts No.	Description
R7840	24366222	CARBON FILM, 1/6W 2.2K OHM J
R7841	24366101	CARBON FILM, 1/6W 100 OHM J
R7842	24366472	CARBON FILM, 1/6W 4.7K OHM J
R7843	24366471	CARBON FILM, 1/6W 470 OHM J
R7844	24366472	CARBON FILM, 1/6W 4.7K OHM J
R7845	24011221	METAL FILM CHIP 1/20W 220 J
R7846	24011472	METAL FILM CHIP 1/20W 4.7K J
R7847	24011103	CHIP, METAL FILM, 1/20W 10K OHM J
R7848	24011103	CHIP, METAL FILM, 1/20W 10K OHM J
R7849	24011103	CHIP, METAL FILM, 1/20W 10K OHM J
R7850	24011224	METAL FILM CHIP 1/20W 220K J
R7851	24011153	CHIP, METAL FILM, 1/2OW 15K OHM J
R7852	24011103	CHIP, METAL FILM, 1/20W 10K OHM J
R7853	24011472	METAL FILM CHIP 1/20W 4.7K J
R7854	24011472	METAL FILM CHIP 1/20W 4.7K J
R7855	24011470	METAL FILM CHIP 1/20W 47 J
R7856	24011470	METAL FILM CHIP 1/20W 47 J
R7863	24366333	CARBON FILM, 1/6W 33K OHM J
R7864	24011101	CHIP, METAL FILM, 1/20W 100 OHM J
R7865	24011101	CHIP, METAL FILM, 1/20W 100 OHM J
R7866	24011682	METAL FILM CHIP 1/20W 6.8K J
R7867	24011682	METAL FILM CHIP 1/20W 6.8K J
R7868	24011561	CHIP, METAL FILM, 1/20W 560 OHM J
R7869	24011470	METAL FILM CHIP 1/20W 47 J
R9501	24366470	CARBON FILM, 1/6W 47 OHM J
R9502	24366470	CARBON FILM, 1/6W 47 OHM J
R9503	24366681	CARBON FILM, 1/6W 680 OHM J
R9504	24366683	CARBON FILM, 1/6W 68K OHM J
R9505	24366393	CARBON FILM, 1/6W 39K OHM J
R9506	24366681	CARBON FILM, 1/6W 680 OHM J
R9601	24366470	CARBON FILM, 1/6W 47 OHM J
R9602	24366392	CARBON FILM, 1/6W 3.9K OHM J
R9603	24366332	CARBON FILM, 1/6W 3.3K OHM J
R9604	24366272	CARBON FILM, 1/6W 2.7K OHM J
R9605	24366682	CARBON FILM, 1/6W 6.8K OHM J
R9606	24366272	CARBON FILM, 1/6W 2.7K OHM J
R9607	24366470	CARBON FILM, 1/6W 47 OHM J
R9608	24366681	CARBON FILM, 1/6W 680 OHM J
R9609	24366683	CARBON FILM, 1/6W 68K OHM J
R9610	24366393	CARBON FILM, 1/6W 39K OHM J
R9611	24366681	CARBON FILM, 1/6W 680 OHM J
R9612	24366470	CARBON FILM, 1/6W 47 OHM J
R9613	24366330	CARBON FILM, 1/6W 33 OHM J
R9614	24366330	CARBON FILM, 1/6W 33 OHM J
RA01	24011102	CHIP, METAL FILM, 1/20W 1K OHM J
RA02	24011103	CHIP, METAL FILM, 1/20W 10K OHM J
RA04	24011102	CHIP, METAL FILM, 1/20W 1K OHM J
RA05	24011102	CHIP, METAL FILM, 1/20W 1K OHM J
RA07	24011102	CHIP, METAL FILM, 1/20W 1K OHM J
RA08	24011102	CHIP, METAL FILM, 1/20W 1K OHM J
RA09	24011682	METAL FILM CHIP 1/20W 6.8K J
RA10	24011682	METAL FILM CHIP 1/20W 6.8K J
RA11	24011331	METAL FILM CHIP 1/20W 330 J
RA12	24011331	METAL FILM CHIP 1/20W 330 J
RA13	24011102	CHIP, METAL FILM, 1/20W 1K OHM J
RA14	24011102	CHIP, METAL FILM, 1/20W 1K OHM J
RA16	24011102	CHIP, METAL FILM, 1/20W 1K OHM J
RA17	24011102	CHIP, METAL FILM, 1/20W 1K OHM J
RA18	24011102	CHIP, METAL FILM, 1/20W 1K OHM J
RA19	24011331	METAL FILM CHIP 1/20W 330 J
RA20	24011331	METAL FILM CHIP 1/20W 330 J
RA21	24011331	METAL FILM CHIP 1/20W 330 J
RA22	24011331	METAL FILM CHIP 1/20W 330 J
RA24	24011472	METAL FILM CHIP 1/20W 4.7K J
RA25	24011102	CHIP, METAL FILM, 1/20W 1K OHM J

Location No.	Parts No.	Description
RA26	24011102	CHIP, METAL FILM, 1/20W 1K OHM J
RA27	24011102	CHIP, METAL FILM, 1/20W 1K OHM J
RA28	24011102	CHIP, METAL FILM, 1/20W 1K OHM J
RA29	24011103	CHIP, METAL FILM, 1/20W 10K OHM J
RA30	24011103	CHIP, METAL FILM, 1/20W 10K OHM J
RA33	24011103	CHIP, METAL FILM, 1/20W 10K OHM J
RA35	24011102	CHIP, METAL FILM, 1/20W 1K OHM J
RA36	24011102	CHIP, METAL FILM, 1/20W 1K OHM J
RA37	24011101	CHIP, METAL FILM, 1/20W 100 OHM J
RA38	24011101	CHIP, METAL FILM, 1/20W 100 OHM J
RA39	24011561	CHIP, METAL FILM, 1/20W 560 OHM J
RA40	24011681	METAL FILM CHIP 1/20W 680 J
RA41	24011223	METAL FILM CHIP 1/20W 22K J
RA43	24011102	CHIP, METAL FILM, 1/20W 1K OHM J
RA44	24011103	CHIP, METAL FILM, 1/20W 10K OHM J
RA46	24011103	CHIP, METAL FILM, 1/20W 10K OHM J
RA51	24011102	CHIP, METAL FILM, 1/20W 1K OHM J
RA52	24011102	CHIP, METAL FILM, 1/20W 1K OHM J
RA60	24011470	METAL FILM CHIP 1/20W 47 J
RA62	24011102	CHIP, METAL FILM, 1/20W 1K OHM J
RA63	24011102	CHIP, METAL FILM, 1/20W 1K OHM J
RA65	24011103	CHIP, METAL FILM, 1/20W 10K OHM J
RA66	24011103	CHIP, METAL FILM, 1/20W 10K OHM J
RA67	24011472	METAL FILM CHIP 1/20W 4.7K J
RA68	24011472	METAL FILM CHIP 1/20W 4.7K J
RA69	24011103	CHIP, METAL FILM, 1/20W 10K OHM J
RA70	24011333	METAL FILM CHIP 1/20W 33K J
RA71	24366683	CARBON FILM, 1/6W 68K OHM J
RA71	24011102	CHIP, METAL FILM, 1/20W 1K OHM J
RA72	24366223	CARBON FILM, 1/6W 22K OHM J
RA72	24011102	CHIP, METAL FILM, 1/20W 1K OHM J
RA73	24366103	CARBON FILM, 1/6W 10K OHM J
RA73	24011470	METAL FILM CHIP 1/20W 47 J
RA75	24011333	METAL FILM CHIP 1/20W 33K J
RA76	24366103	CARBON FILM, 1/6W 10K OHM J
RA76	24011103	CHIP, METAL FILM, 1/20W 10K OHM J
RA77	24366223	CARBON FILM, 1/6W 22K OHM J
RA78	24366683	CARBON FILM, 1/6W 68K OHM J
RA78	24011102	CHIP, METAL FILM, 1/20W 1K OHM J
RA82	24011103	CHIP, METAL FILM, 1/20W 10K OHM J
RA89	24011222	CHIP, METAL FILM, 1/20W 2.2K OHM J
RB01	24366271	CARBON FILM, 1/6W 270 OHM J
RB02	24366471	CARBON FILM, 1/6W 470 OHM J
RB03	24011101	CHIP, METAL FILM, 1/20W 100 OHM J
RB04	24366223	CARBON FILM, 1/6W 22K OHM J
RB04	24011331	METAL FILM CHIP 1/20W 330 J
RB05	24366223	CARBON FILM, 1/6W 22K OHM J
RB05	24011105	CHIP, METAL FILM, 1/20W 1M OHM J
RB06	24011123	CHIP, METAL FILM, 1/20W 12K OHM J
RB07	24366271	CARBON FILM, 1/6W 270 OHM J
RB07	24011392	METAL FILM CHIP 1/20W 3.9K J
RB08	24366271	CARBON FILM, 1/6W 270 OHM J
RB08	24011392	METAL FILM CHIP 1/20W 3.9K J
RB09	24366470	CARBON FILM, 1/6W 47 OHM J
RB09	24011103	CHIP, METAL FILM, 1/20W 10K OHM J
RB10	24366101	CARBON FILM, 1/6W 100 OHM J
RB10	24011101	CHIP, METAL FILM, 1/20W 100 OHM J
RB11	24366103	CARBON FILM, 1/6W 10K OHM J
RB11	24011222	CHIP, METAL FILM, 1/20W 2.2K OHM J
RB12	24366471	CARBON FILM, 1/6W 470 OHM J
RB32	24011105	CHIP, METAL FILM, 1/20W 1M OHM J
RB33	24011123	CHIP, METAL FILM, 1/20W 12K OHM J
RB34	24011392	METAL FILM CHIP 1/20W 3.9K J
RB35	24011392	METAL FILM CHIP 1/20W 3.9K J
RB43	24011103	CHIP, METAL FILM, 1/20W 10K OHM J

Location No.	Parts No.	Description
RB44	24011103	CHIP, METAL FILM, 1/20W 10K OHM J
RB45	24011101	CHIP, METAL FILM, 1/20W 100 OHM J
RB46	24011103	CHIP, METAL FILM, 1/20W 10K OHM J
RB49	24011331	METAL FILM CHIP 1/20W 330 J
RB81	24011122	CHIP, METAL FILM, 1/20W 1.2K OHM J
RB82	24011123	CHIP, METAL FILM, 1/20W 12K OHM J
RB83	24011123	CHIP, METAL FILM, 1/20W 12K OHM J
RB90	24011392	METAL FILM CHIP 1/20W 3.9K J
RB91	24011473	METAL FILM CHIP 1/20W 47K J
RB92	24011271	CHIP, METAL FILM, 1/20W 270 OHM J
RB93	24011271	CHIP, METAL FILM, 1/20W 270 OHM J
RB94	24011222	CHIP, METAL FILM, 1/20W 2.2K OHM J
RB95	24011222	CHIP, METAL FILM, 1/20W 2.2K OHM J
RB96	24011273	METAL FILM CHIP 1/20W 27K J
RB97	24011273	METAL FILM CHIP 1/20W 27K J
RB98	24011102	CHIP, METAL FILM, 1/20W 1K OHM J
RC01	24011681	METAL FILM CHIP 1/20W 680 J
RC02	24011681	METAL FILM CHIP 1/20W 680 J
RC03	24011681	METAL FILM CHIP 1/20W 680 J
RC04	24011681	METAL FILM CHIP 1/20W 680 J
RC05	24011681	METAL FILM CHIP 1/20W 680 J
RC06	24011681	METAL FILM CHIP 1/20W 680 J
RC07	24011681	METAL FILM CHIP 1/20W 680 J
RC08	24011681	METAL FILM CHIP 1/20W 680 J
RC09	24000445	CHIP JUMPER, 1608TYPE
RC10	24000445	CHIP JUMPER, 1608TYPE
RC60	24366681	CARBON FILM, 1/6W 680 OHM J
RC61	24366681	CARBON FILM, 1/6W 680 OHM J
RD05	24011101	CHIP, METAL FILM, 1/20W 100 OHM J
RD08	24011102	CHIP, METAL FILM, 1/20W 1K OHM J
RD16	24011333	METAL FILM CHIP 1/20W 33K J
RD81	24011151	CHIP, METAL FILM, 1/20W 150 OHM J
RD82	24011561	CHIP, METAL FILM, 1/20W 560 OHM J
RD83	24011151	CHIP, METAL FILM, 1/20W 150 OHM J
RD84	24011103	CHIP, METAL FILM, 1/20W 10K OHM J
RD85	24011103	CHIP, METAL FILM, 1/20W 10K OHM J
RD86	24011223	METAL FILM CHIP 1/20W 22K J
RD87	24011103	CHIP, METAL FILM, 1/20W 10K OHM J
RD88	24011103	CHIP, METAL FILM, 1/20W 10K OHM J
RD89	24011104	CHIP, METAL FILM, 1/20W 100K OHM J
RD90	24011223	METAL FILM CHIP 1/20W 22K J
RD91	24011151	CHIP, METAL FILM, 1/20W 150 OHM J
RD051	24011103	CHIP, METAL FILM, 1/20W 10K OHM J
RF01	24011103	CHIP, METAL FILM, 1/20W 10K OHM J
RF02	24011102	CHIP, METAL FILM, 1/20W 1K OHM J
RF03	24011101	CHIP, METAL FILM, 1/20W 100 OHM J
RF04	24011103	CHIP, METAL FILM, 1/20W 10K OHM J
RF05	24011473	METAL FILM CHIP 1/20W 47K J
RF06	24011473	METAL FILM CHIP 1/20W 47K J
RF07	24011103	CHIP, METAL FILM, 1/20W 10K OHM J
RF08	24011223	METAL FILM CHIP 1/20W 22K J
RF09	24011223	METAL FILM CHIP 1/20W 22K J
RF10	24011101	CHIP, METAL FILM, 1/20W 100 OHM J
RF11	24000445	CHIP JUMPER, 1608TYPE
RF11	24011102	CHIP, METAL FILM, 1/20W 1K OHM J
RF12	24011102	CHIP, METAL FILM, 1/20W 1K OHM J
RF13	24011562	METAL FILM CHIP 1/20W 5.6K J
RF14	24011102	CHIP, METAL FILM, 1/20W 1K OHM J
RF15	24011562	METAL FILM CHIP 1/20W 5.6K J
RF16	24011102	CHIP, METAL FILM, 1/20W 1K OHM J
RF17	24011562	METAL FILM CHIP 1/20W 5.6K J
RF18	24011101	CHIP, METAL FILM, 1/20W 100 OHM J
RF19	24011223	METAL FILM CHIP 1/20W 22K J
RF20	24011473	METAL FILM CHIP 1/20W 47K J
RF21	24011102	CHIP, METAL FILM, 1/20W 1K OHM J

Location No.	Parts No.	Description
RF22	24011681	METAL FILM CHIP 1/20W 680 J
RF23	24011101	CHIP, METAL FILM, 1/20W 100 OHM J
RF24	24011102	CHIP, METAL FILM, 1/20W 1K OHM J
RF25	24011152	CHIP, METAL FILM, 1/20W 1.5K OHM J
RF26	24011471	METAL FILM CHIP 1/20W 470 J
RF27	24011471	METAL FILM CHIP 1/20W 470 J
RF28	24019398	CHIP BLOCK P-8 1/16W P-8 330J
RF29	24019398	CHIP BLOCK P-8 1/16W P-8 330J
RF30	24019398	CHIP BLOCK P-8 1/16W P-8 330J
RF31	24011101	CHIP, METAL FILM, 1/20W 100 OHM J
RF32	24019398	CHIP BLOCK P-8 1/16W P-8 330J
RF33	24019398	CHIP BLOCK P-8 1/16W P-8 330J
RF34	24019398	CHIP BLOCK P-8 1/16W P-8 330J
RF35	24019398	CHIP BLOCK P-8 1/16W P-8 330J
RF36	24011101	CHIP, METAL FILM, 1/20W 100 OHM J
RF37	24011330	METAL FILM CHIP 1/20W 33 J
RF38	24011330	METAL FILM CHIP 1/20W 33 J
RF39	24011330	METAL FILM CHIP 1/20W 33 J
RF40	24011472	METAL FILM CHIP 1/20W 4.7K J
RF42	24011562	METAL FILM CHIP 1/20W 5.6K J
RF43	24011562	METAL FILM CHIP 1/20W 5.6K J
RF44	24011562	METAL FILM CHIP 1/20W 5.6K J
RF46	24000445	CHIP JUMPER, 1608TYPE
RF51	24011103	CHIP, METAL FILM, 1/20W 10K OHM J
RF51	24011102	CHIP, METAL FILM, 1/20W 1K OHM J
RF63	24011472	METAL FILM CHIP 1/20W 4.7K J
RF64	24011472	METAL FILM CHIP 1/20W 4.7K J
RF65	24011472	METAL FILM CHIP 1/20W 4.7K J
RF66	24011472	METAL FILM CHIP 1/20W 4.7K J
RF67	24011472	METAL FILM CHIP 1/20W 4.7K J
RF68	24011332	METAL FILM CHIP 1/20W 3.3K J
RF69	24011332	METAL FILM CHIP 1/20W 3.3K J
RF70	24011103	CHIP, METAL FILM, 1/20W 10K OHM J
RF71	24011103	CHIP, METAL FILM, 1/20W 10K OHM J
RF71	24011332	METAL FILM CHIP 1/20W 3.3K J
RF72	24011103	CHIP, METAL FILM, 1/20W 10K OHM J
RF72	24011332	METAL FILM CHIP 1/20W 3.3K J
RF74	24011103	CHIP, METAL FILM, 1/20W 10K OHM J
RF75	24011103	CHIP, METAL FILM, 1/20W 10K OHM J
RF76	24011103	CHIP, METAL FILM, 1/20W 10K OHM J
RF77	24011103	CHIP, METAL FILM, 1/20W 10K OHM J
RF78	24011332	METAL FILM CHIP 1/20W 3.3K J
RF79	24019398	CHIP BLOCK P-8 1/16W P-8 330J
RF80	24019398	CHIP BLOCK P-8 1/16W P-8 330J
RF81	24011103	CHIP, METAL FILM, 1/20W 10K OHM J
RF81	24011102	CHIP, METAL FILM, 1/20W 1K OHM J
RF82	24011103	CHIP, METAL FILM, 1/20W 10K OHM J
RF84	24000445	CHIP JUMPER, 1608TYPE
RF86	24011101	CHIP, METAL FILM, 1/20W 100 OHM J
RF87	24000445	CHIP JUMPER, 1608TYPE
RF87	24011102	CHIP, METAL FILM, 1/20W 1K OHM J
RF88	24000445	CHIP JUMPER, 1608TYPE
RF89	24000445	CHIP JUMPER, 1608TYPE
RF93	24000445	CHIP JUMPER, 1608TYPE
RF94	24011103	CHIP, METAL FILM, 1/20W 10K OHM J
RF95	24011103	CHIP, METAL FILM, 1/20W 10K OHM J
RF96	24000445	CHIP JUMPER, 1608TYPE
RF97	24011330	METAL FILM CHIP 1/20W 33 J
RF98	24011330	METAL FILM CHIP 1/20W 33 J
RF99	24011330	METAL FILM CHIP 1/20W 33 J
RF100	24011330	METAL FILM CHIP 1/20W 33 J
RF101	24011330	METAL FILM CHIP 1/20W 33 J
RF102	24011330	METAL FILM CHIP 1/20W 33 J
RF103	24011330	METAL FILM CHIP 1/20W 33 J
RF104	24011330	METAL FILM CHIP 1/20W 33 J

Location No.	Parts No.	Description
RF105	24011330	METAL FILM CHIP 1/20W 33 J
RF106	24011330	METAL FILM CHIP 1/20W 33 J
RF107	24011330	METAL FILM CHIP 1/20W 33 J
RF108	24011330	METAL FILM CHIP 1/20W 33 J
RF109	24011330	METAL FILM CHIP 1/20W 33 J
RF110	24011330	METAL FILM CHIP 1/20W 33 J
RF111	24011330	METAL FILM CHIP 1/20W 33 J
RF112	24011330	METAL FILM CHIP 1/20W 33 J
RG03	24510159	CERAMIC COVERD, 5W 1.5 OHM J
RG04	24376154	CARBON FILM, 1/2W 150K OHM J
RG05	24310829	METAL FILM 1/2W 8R2 J
RG11	24366471	CARBON FILM, 1/6W 470 OHM J
RG12	24310279	METAL FILM 1/2W 2R7 J
RG17	24366103	CARBON FILM, 1/6W 10K OHM J
RG18	24366472	CARBON FILM, 1/6W 4.7K OHM J
RG19	24366103	CARBON FILM, 1/6W 10K OHM J
RG20	24366331	CARBON FILM, 1/6W 330 OHM J
RG21	24310829	METAL FILM 1/2W 8R2 J
RG22	24323229	OXIDE METAL FILM, 2W 2.2 OHM J
RG23	24321228	OXIDE METAL FILM, 1/2W 0.22 OHM J
RG26	24366229	CARBON FILM, 1/6W 2.2 OHM J
RG75	24381182	OXIDE METAL FILM, 1/2W 1.8K OHM J
RH002	24872473	CHIP, METAL FILM, 1/16W 47K OHM J
RH003	24872473	CHIP, METAL FILM, 1/16W 47K OHM J
RH004	24872221	CHIP, METAL FILM, 1/16W 220 OHM J
RH005	24872221	CHIP, METAL FILM, 1/16W 220 OHM J
RH006	24872221	CHIP, METAL FILM, 1/16W 220 OHM J
RH007	24872221	CHIP, METAL FILM, 1/16W 220 OHM J
RH008	24872221	CHIP, METAL FILM, 1/16W 220 OHM J
RH009	24872103	CHIP, METAL FILM, 1/16W 10K OHM J
RH041	24872101	CHIP, METAL FILM, 1/16W 100 OHM J
RH042	24872101	CHIP, METAL FILM, 1/16W 100 OHM J
RH043	24872101	CHIP, METAL FILM, 1/16W 100 OHM J
RH044	24872101	CHIP, METAL FILM, 1/16W 100 OHM J
RH045	24872101	CHIP, METAL FILM, 1/16W 100 OHM J
RH046	24872101	CHIP, METAL FILM, 1/16W 100 OHM J
RH047	24872101	CHIP, METAL FILM, 1/16W 100 OHM J
RH048	24872101	CHIP, METAL FILM, 1/16W 100 OHM J
RH051	24872222	CHIP, METAL FILM, 1/16W 2.2K OHM J
RH061	24872561	CHIP, METAL FILM, 1/16W 560 OHM J
RH062	24872102	CHIP, METAL FILM, 1/16W 1K OHM J
RH063	24872103	CHIP, METAL FILM, 1/16W 10K OHM J
RH064	24872103	CHIP, METAL FILM, 1/16W 10K OHM J
RH170	24872122	CHIP, METAL FILM, 1/16W 1.2K OHM J
RH171	24872122	CHIP, METAL FILM, 1/16W 1.2K OHM J
RH172	24872122	CHIP, METAL FILM, 1/16W 1.2K OHM J
RH173	24872122	CHIP, METAL FILM, 1/16W 1.2K OHM J
RH174	24872122	CHIP, METAL FILM, 1/16W 1.2K OHM J
RH175	24872122	CHIP, METAL FILM, 1/16W 1.2K OHM J
RH176	24872122	CHIP, METAL FILM, 1/16W 1.2K OHM J
RH177	24872122	CHIP, METAL FILM, 1/16W 1.2K OHM J
RH178	24872122	CHIP, METAL FILM, 1/16W 1.2K OHM J
RH179	24872122	CHIP, METAL FILM, 1/16W 1.2K OHM J
RH180	24872122	CHIP, METAL FILM, 1/16W 1.2K OHM J
RH181	24872122	CHIP, METAL FILM, 1/16W 1.2K OHM J
RH182	24872122	CHIP, METAL FILM, 1/16W 1.2K OHM J
RH183	24872122	CHIP, METAL FILM, 1/16W 1.2K OHM J
RH184	24872122	CHIP, METAL FILM, 1/16W 1.2K OHM J
RH185	24872122	CHIP, METAL FILM, 1/16W 1.2K OHM J
RH186	24872122	CHIP, METAL FILM, 1/16W 1.2K OHM J
RH187	24872122	CHIP, METAL FILM, 1/16W 1.2K OHM J
RH188	24872122	CHIP, METAL FILM, 1/16W 1.2K OHM J
RH189	24872122	CHIP, METAL FILM, 1/16W 1.2K OHM J
RH190	24872122	CHIP, METAL FILM, 1/16W 1.2K OHM J
RH191	24872122	CHIP, METAL FILM, 1/16W 1.2K OHM J

Location No.	Parts No.	Description
RH192	24872122	CHIP, METAL FILM, 1/16W 1.2K OHM J
RH193	24872122	CHIP, METAL FILM, 1/16W 1.2K OHM J
RH194	24872122	CHIP, METAL FILM, 1/16W 1.2K OHM J
RH195	24872122	CHIP, METAL FILM, 1/16W 1.2K OHM J
RH196	24872122	CHIP, METAL FILM, 1/16W 1.2K OHM J
RH197	24872122	CHIP, METAL FILM, 1/16W 1.2K OHM J
RH198	24872122	CHIP, METAL FILM, 1/16W 1.2K OHM J
RH199	24872122	CHIP, METAL FILM, 1/16W 1.2K OHM J
RH201	24872472	CHIP, METAL FILM, 1/16W 4.7K OHM J
RH202	24872472	CHIP, METAL FILM, 1/16W 4.7K OHM J
RH203	24872472	CHIP, METAL FILM, 1/16W 4.7K OHM J
RH204	24872472	CHIP, METAL FILM, 1/16W 4.7K OHM J
RH205	24872472	CHIP, METAL FILM, 1/16W 4.7K OHM J
RH206	24872472	CHIP, METAL FILM, 1/16W 4.7K OHM J
RH207	24872472	CHIP, METAL FILM, 1/16W 4.7K OHM J
RH208	24872221	CHIP, METAL FILM, 1/16W 220 OHM J
RH209	24872102	CHIP, METAL FILM, 1/16W 1K OHM J
RH210	24872102	CHIP, METAL FILM, 1/16W 1K OHM J
RH211	24872473	CHIP, METAL FILM, 1/16W 47K OHM J
RH212	24872473	CHIP, METAL FILM, 1/16W 47K OHM J
RR01	24011102	CHIP, METAL FILM, 1/20W 1K OHM J
RR02	24011104	CHIP, METAL FILM, 1/20W 100K OHM J
RR03	24011222	CHIP, METAL FILM, 1/20W 2.2K OHM J
RR04	24011101	CHIP, METAL FILM, 1/20W 100 OHM J
RR05	24011102	CHIP, METAL FILM, 1/20W 1K OHM J
RR06	24011223	METAL FILM CHIP 1/20W 22K J
RR07	24011152	CHIP, METAL FILM, 1/20W 1.5K OHM J
RR10	24011102	CHIP, METAL FILM, 1/20W 1K OHM J
RR11	24011681	METAL FILM CHIP 1/20W 680 J
RR12	24011152	CHIP, METAL FILM, 1/20W 1.5K OHM J
RR13	24011152	CHIP, METAL FILM, 1/20W 1.5K OHM J
RR15	24011391	METAL FILM CHIP 1/20W 390 J
RR16	24011391	METAL FILM CHIP 1/20W 390 J
RR17	24011391	METAL FILM CHIP 1/20W 390 J
RR18	24011102	CHIP, METAL FILM, 1/20W 1K OHM J
RR22	24011103	CHIP, METAL FILM, 1/20W 10K OHM J
RR23	24011103	CHIP, METAL FILM, 1/20W 10K OHM J
RR35	24011392	METAL FILM CHIP 1/20W 3.9K J
RR36	24011392	METAL FILM CHIP 1/20W 3.9K J
RR37	24011392	METAL FILM CHIP 1/20W 3.9K J
RR40	24011102	CHIP, METAL FILM, 1/20W 1K OHM J
RR48	24011102	CHIP, METAL FILM, 1/20W 1K OHM J
RR61	24011222	CHIP, METAL FILM, 1/20W 2.2K OHM J
RR63	24011332	METAL FILM CHIP 1/20W 3.3K J
RR64	24011152	CHIP, METAL FILM, 1/20W 1.5K OHM J
RR65	24011102	CHIP, METAL FILM, 1/20W 1K OHM J
RR68	24011332	METAL FILM CHIP 1/20W 3.3K J
RR69	24011152	CHIP, METAL FILM, 1/20W 1.5K OHM J
RR70	24011102	CHIP, METAL FILM, 1/20W 1K OHM J
RR74	24011102	CHIP, METAL FILM, 1/20W 1K OHM J
RR75	24011102	CHIP, METAL FILM, 1/20W 1K OHM J
RR85	24011102	CHIP, METAL FILM, 1/20W 1K OHM J
RR86	24011152	CHIP, METAL FILM, 1/20W 1.5K OHM J
RR87	24011332	METAL FILM CHIP 1/20W 3.3K J
RR88	24011102	CHIP, METAL FILM, 1/20W 1K OHM J
RS01	24011562	METAL FILM CHIP 1/20W 5.6K J
RS02	24011562	METAL FILM CHIP 1/20W 5.6K J
RS03	24011562	METAL FILM CHIP 1/20W 5.6K J
RS04	24011562	METAL FILM CHIP 1/20W 5.6K J
RS05	24011562	METAL FILM CHIP 1/20W 5.6K J
RS06	24011562	METAL FILM CHIP 1/20W 5.6K J
RS07	24011562	METAL FILM CHIP 1/20W 5.6K J
RS08	24011562	METAL FILM CHIP 1/20W 5.6K J
RS09	24011562	METAL FILM CHIP 1/20W 5.6K J
RS10	24011562	METAL FILM CHIP 1/20W 5.6K J

Location No.	Parts No.	Description
RS11	24011101	CHIP, METAL FILM, 1/20W 100 OHM J
RS12	24011101	CHIP, METAL FILM, 1/20W 100 OHM J
RS13	24011681	METAL FILM CHIP 1/20W 680 J
RS14	24011681	METAL FILM CHIP 1/20W 680 J
RS15	24011104	CHIP, METAL FILM, 1/20W 100K OHM J
RS16	24011104	CHIP, METAL FILM, 1/20W 100K OHM J
RS17	24011223	METAL FILM CHIP 1/20W 22K J
RS18	24011223	METAL FILM CHIP 1/20W 22K J
RS19	24011101	CHIP, METAL FILM, 1/20W 100 OHM J
RS20	24011101	CHIP, METAL FILM, 1/20W 100 OHM J
RS21	24011222	CHIP, METAL FILM, 1/20W 2.2K OHM J
RS22	24011222	CHIP, METAL FILM, 1/20W 2.2K OHM J
RS23	24011223	METAL FILM CHIP 1/20W 22K J
RS24	24011223	METAL FILM CHIP 1/20W 22K J
RS25	24011223	METAL FILM CHIP 1/20W 22K J
RS26	24011223	METAL FILM CHIP 1/20W 22K J
RS27	24011223	METAL FILM CHIP 1/20W 22K J
RS28	24011223	METAL FILM CHIP 1/20W 22K J
RS29	24011681	METAL FILM CHIP 1/20W 680 J
RS30	24011681	METAL FILM CHIP 1/20W 680 J
RS31	24011223	METAL FILM CHIP 1/20W 22K J
RS32	24011223	METAL FILM CHIP 1/20W 22K J
RS33	24011223	METAL FILM CHIP 1/20W 22K J
RS34	24011223	METAL FILM CHIP 1/20W 22K J
RS49	24011681	METAL FILM CHIP 1/20W 680 J
RS50	24011681	METAL FILM CHIP 1/20W 680 J
RS51	24011104	CHIP, METAL FILM, 1/20W 100K OHM J
RS52	24011104	CHIP, METAL FILM, 1/20W 100K OHM J
RS53	24011223	METAL FILM CHIP 1/20W 22K J
RS54	24011223	METAL FILM CHIP 1/20W 22K J
RS55	24011103	CHIP, METAL FILM, 1/20W 10K OHM J
RS56	24011104	CHIP, METAL FILM, 1/20W 100K OHM J
RS57	24011102	CHIP, METAL FILM, 1/20W 1K OHM J
RV04	24011101	CHIP, METAL FILM, 1/20W 100 OHM J
RV05	24011222	CHIP, METAL FILM, 1/20W 2.2K OHM J
RV07	24367103	CARBON FILM, 1/6W 10K OHM G
RV08	24367103	CARBON FILM, 1/6W 10K OHM G
RV09	24011101	CHIP, METAL FILM, 1/20W 100 OHM J
RV10	24011101	CHIP, METAL FILM, 1/20W 100 OHM J
RV20	24367103	CARBON FILM, 1/6W 10K OHM G
RV21	24367392	CARBON FILM, 1/6W 3.9K OHM G
RV22	24011222	CHIP, METAL FILM, 1/20W 2.2K OHM J
RV23	24552101	OXIDE METAL FILM, 1/2W 100 OHM J
RV25	24011101	CHIP, METAL FILM, 1/20W 100 OHM J
RV26	24011102	CHIP, METAL FILM, 1/20W 1K OHM J
RV27	24872750	CHIP, METAL FILM, 1/16W 75 OHM J
RV28	24011103	CHIP, METAL FILM, 1/20W 10K OHM J
RV29	24011562	METAL FILM CHIP 1/20W 5.6K J
RV30	24872750	CHIP, METAL FILM, 1/16W 75 OHM J
RV31	24872750	CHIP, METAL FILM, 1/16W 75 OHM J
RV32	24872750	CHIP, METAL FILM, 1/16W 75 OHM J
RV33	24367392	CARBON FILM, 1/6W 3.9K OHM G
RV34	24367392	CARBON FILM, 1/6W 3.9K OHM G
RV37	24872750	CHIP, METAL FILM, 1/16W 75 OHM J
RV41	24011101	CHIP, METAL FILM, 1/20W 100 OHM J
RV42	24011391	METAL FILM CHIP 1/20W 390 J
RV43	24011102	CHIP, METAL FILM, 1/20W 1K OHM J
RV44	24011101	CHIP, METAL FILM, 1/20W 100 OHM J
RV60	24011222	CHIP, METAL FILM, 1/20W 2.2K OHM J
RV61	24552101	OXIDE METAL FILM, 1/2W 100 OHM J
RV62	24011101	CHIP, METAL FILM, 1/20W 100 OHM J
RV63	24011102	CHIP, METAL FILM, 1/20W 1K OHM J
RV64	24872750	CHIP, METAL FILM, 1/16W 75 OHM J
RV65	24552101	OXIDE METAL FILM, 1/2W 100 OHM J
RV66	24872750	CHIP, METAL FILM, 1/16W 75 OHM J

Location No.	Parts No.	Description
RV67	24011102	CHIP, METAL FILM, 1/20W 1K OHM J
RV68	24011101	CHIP, METAL FILM, 1/20W 100 OHM J
RV69	24011103	CHIP, METAL FILM, 1/20W 10K OHM J
RV70	24011562	METAL FILM CHIP 1/20W 5.6K J
RV81	24872750	CHIP, METAL FILM, 1/16W 75 OHM J
RV85	24872750	CHIP, METAL FILM, 1/16W 75 OHM J
RV86	24872750	CHIP, METAL FILM, 1/16W 75 OHM J
RV87	24872750	CHIP, METAL FILM, 1/16W 75 OHM J
RV88	24872151	CHIP, METAL FILM, 1/16W 150 OHM J
RV89	24872151	CHIP, METAL FILM, 1/16W 150 OHM J
RV94	24011750	METAL FILM CHIP 1/20W 75 J
RV95	24011750	METAL FILM CHIP 1/20W 75 J
RV96	24011750	METAL FILM CHIP 1/20W 75 J
RV281	24367102	CARBON FILM, 1/6W 1K OHM G
RV331	24367102	CARBON FILM, 1/6W 1K OHM G
RV341	24367102	CARBON FILM, 1/6W 1K OHM G
RX101	24872393	CHIP, METAL FILM, 1/16W 39K OHM J
RX102	24872153	CHIP, METAL FILM, 1/16W 15K OHM J
RX103	24872221	CHIP, METAL FILM, 1/16W 220 OHM J
RX104	24872392	CHIP, METAL FILM, 1/16W 3.9K OHM J
RX106	24872331	CHIP, METAL FILM, 1/16W 330 OHM J
RX107	24872331	CHIP, METAL FILM, 1/16W 330 OHM J
RX108	24872680	CHIP, METAL FILM, 1/16W 68 OHM J
RX109	24872122	CHIP, METAL FILM, 1/16W 1.2K OHM J
RX110	24872122	CHIP, METAL FILM, 1/16W 1.2K OHM J
RX111	24872681	CHIP, METAL FILM, 1/16W 680 OHM J
RX112	24872470	CHIP, METAL FILM, 1/16W 47 OHM J
RX113	24872471	CHIP, METAL FILM, 1/16W 470 OHM J
RX114	24872681	CHIP, METAL FILM, 1/16W 680 OHM J
RX115	24872101	CHIP, METAL FILM, 1/16W 100 OHM J
RX116	24872681	CHIP, METAL FILM, 1/16W 680 OHM J
RX117	24872201	CHIP, METAL FILM, 1/16W 200 OHM J
RX118	24872221	CHIP, METAL FILM, 1/16W 220 OHM J
RX119	24872101	CHIP, METAL FILM, 1/16W 100 OHM J
RX120	24872101	CHIP, METAL FILM, 1/16W 100 OHM J
RX121	24872101	CHIP, METAL FILM, 1/16W 100 OHM J
RX122	24872122	CHIP, METAL FILM, 1/16W 1.2K OHM J
RX123	24872331	CHIP, METAL FILM, 1/16W 330 OHM J
RX124	24872101	CHIP, METAL FILM, 1/16W 100 OHM J
RX125	24872101	CHIP, METAL FILM, 1/16W 100 OHM J
RX129	24872100	CHIP, METAL FILM, 1/16W 10 OHM J
RX141	24872101	CHIP, METAL FILM, 1/16W 100 OHM J
RX143	24872393	CHIP, METAL FILM, 1/16W 39K OHM J
RX144	24872153	CHIP, METAL FILM, 1/16W 15K OHM J
RX145	24872201	CHIP, METAL FILM, 1/16W 200 OHM J
RX146	24872221	CHIP, METAL FILM, 1/16W 220 OHM J
RX147	24872681	CHIP, METAL FILM, 1/16W 680 OHM J
RX150	24872101	CHIP, METAL FILM, 1/16W 100 OHM J
RX152	24872331	CHIP, METAL FILM, 1/16W 330 OHM J
RX155	24872102	CHIP, METAL FILM, 1/16W 1K OHM J
RX156	24872272	CHIP, METAL FILM, 1/16W 2.7K OHM J
RX157	24872471	CHIP, METAL FILM, 1/16W 470 OHM J
RX158	24872471	CHIP, METAL FILM, 1/16W 470 OHM J
RX161	24872101	CHIP, METAL FILM, 1/16W 100 OHM J
RX163	24872393	CHIP, METAL FILM, 1/16W 39K OHM J
RX164	24872153	CHIP, METAL FILM, 1/16W 15K OHM J
RX165	24872201	CHIP, METAL FILM, 1/16W 200 OHM J
RX166	24872221	CHIP, METAL FILM, 1/16W 220 OHM J
RX167	24872681	CHIP, METAL FILM, 1/16W 680 OHM J
RX170	24872101	CHIP, METAL FILM, 1/16W 100 OHM J
RX172	24872331	CHIP, METAL FILM, 1/16W 330 OHM J
RX175	24872102	CHIP, METAL FILM, 1/16W 1K OHM J
RX176	24872272	CHIP, METAL FILM, 1/16W 2.7K OHM J
RX177	24872471	CHIP, METAL FILM, 1/16W 470 OHM J
RX178	24872471	CHIP, METAL FILM, 1/16W 470 OHM J

Location No.	Parts No.	Description
RX179	24872101	CHIP, METAL FILM, 1/16W 100 OHM J
RX180	24872101	CHIP, METAL FILM, 1/16W 100 OHM J
RX181	24872680	CHIP, METAL FILM, 1/16W 68 OHM J
RX185	24872470	CHIP, METAL FILM, 1/16W 47 OHM J
RX186	24872101	CHIP, METAL FILM, 1/16W 100 OHM J
RX191	24872100	CHIP, METAL FILM, 1/16W 10 OHM J
RX192	24872100	CHIP, METAL FILM, 1/16W 10 OHM J
RX193	24872100	CHIP, METAL FILM, 1/16W 10 OHM J
RX201	24872102	CHIP, METAL FILM, 1/16W 1K OHM J
RX202	24872103	CHIP, METAL FILM, 1/16W 10K OHM J
RX203	24872103	CHIP, METAL FILM, 1/16W 10K OHM J
RX204	24000824	JUMPER CHIP, 2125TYPE
RX205	24019439	CHIP BLOCK P-8 1/16W P-8 470J
RX206	24019439	CHIP BLOCK P-8 1/16W P-8 470J
RX207	24019439	CHIP BLOCK P-8 1/16W P-8 470J
RX208	24019439	CHIP BLOCK P-8 1/16W P-8 470J
RX209	24019439	CHIP BLOCK P-8 1/16W P-8 470J
RX210	24019439	CHIP BLOCK P-8 1/16W P-8 470J
RX211	24019439	CHIP BLOCK P-8 1/16W P-8 470J
RX212	24019439	CHIP BLOCK P-8 1/16W P-8 470J
RX214	24872103	CHIP, METAL FILM, 1/16W 10K OHM J
RX216	24872102	CHIP, METAL FILM, 1/16W 1K OHM J
RX221	24872470	CHIP, METAL FILM, 1/16W 47 OHM J
RX222	24872470	CHIP, METAL FILM, 1/16W 47 OHM J
RX223	24872470	CHIP, METAL FILM, 1/16W 47 OHM J
RX225	24872151	CHIP, METAL FILM, 1/16W 150 OHM J
RX226	24872331	CHIP, METAL FILM, 1/16W 330 OHM J
RX229	24872332	CHIP, METAL FILM, 1/16W 3.3K OHM J
RX231	24872470	CHIP, METAL FILM, 1/16W 47 OHM J
RX232	24872470	CHIP, METAL FILM, 1/16W 47 OHM J
RX233	24872470	CHIP, METAL FILM, 1/16W 47 OHM J
RX235	24872274	METAL FILM CHIP 1/16W 270K J
RX236	24872472	CHIP, METAL FILM, 1/16W 4.7K OHM J
RX237	24872221	CHIP, METAL FILM, 1/16W 220 OHM J
RX240	24872272	CHIP, METAL FILM, 1/16W 2.7K OHM J
RX256	24000824	JUMPER CHIP, 2125TYPE
RX258	24872470	CHIP, METAL FILM, 1/16W 47 OHM J
RX259	24872470	CHIP, METAL FILM, 1/16W 47 OHM J
RX261	24872101	CHIP, METAL FILM, 1/16W 100 OHM J
RX263	24872101	CHIP, METAL FILM, 1/16W 100 OHM J
RX274	24872221	CHIP, METAL FILM, 1/16W 220 OHM J
RX275	24872221	CHIP, METAL FILM, 1/16W 220 OHM J
RX276	24872221	CHIP, METAL FILM, 1/16W 220 OHM J
RX277	24872221	CHIP, METAL FILM, 1/16W 220 OHM J
RX278	24872221	CHIP, METAL FILM, 1/16W 220 OHM J
RX279	24872471	CHIP, METAL FILM, 1/16W 470 OHM J
RX280	24872471	CHIP, METAL FILM, 1/16W 470 OHM J
RX281	24019439	CHIP BLOCK P-8 1/16W P-8 470J
RX282	24019439	CHIP BLOCK P-8 1/16W P-8 470J
RX283	24019439	CHIP BLOCK P-8 1/16W P-8 470J
RX284	24019439	CHIP BLOCK P-8 1/16W P-8 470J
RX285	24872332	CHIP, METAL FILM, 1/16W 3.3K OHM J
RX286	24872332	CHIP, METAL FILM, 1/16W 3.3K OHM J
RX291	24872101	CHIP, METAL FILM, 1/16W 100 OHM J
RX292	24872101	CHIP, METAL FILM, 1/16W 100 OHM J
RX293	24872332	CHIP, METAL FILM, 1/16W 3.3K OHM J
RX301	24872201	CHIP, METAL FILM, 1/16W 200 OHM J
RX302	24872272	CHIP, METAL FILM, 1/16W 2.7K OHM J
RX303	24872201	CHIP, METAL FILM, 1/16W 200 OHM J
RX304	24872272	CHIP, METAL FILM, 1/16W 2.7K OHM J
RX305	24872201	CHIP, METAL FILM, 1/16W 200 OHM J
RX306	24872272	CHIP, METAL FILM, 1/16W 2.7K OHM J
RX307	24872222	CHIP, METAL FILM, 1/16W 2.2K OHM J
RX308	24872112	CHIP, METAL FILM, 1/16W 1.1K OHM J
RX309	24872122	CHIP, METAL FILM, 1/16W 1.2K OHM J

Location No.	Parts No.	Description
RX310	24872122	CHIP, METAL FILM, 1/16W 1.2K OHM J
RX311	24872122	CHIP, METAL FILM, 1/16W 1.2K OHM J
RX312	24872101	CHIP, METAL FILM, 1/16W 100 OHM J
RX313	24872152	CHIP, METAL FILM, 1/16W 1.5K OHM J
RX314	24872101	CHIP, METAL FILM, 1/16W 100 OHM J
RX315	24872101	CHIP, METAL FILM, 1/16W 100 OHM J
RX316	24872101	CHIP, METAL FILM, 1/16W 100 OHM J
RX321	24872223	CHIP, METAL FILM, 1/16W 22K OHM J
RX322	24872223	CHIP, METAL FILM, 1/16W 22K OHM J
RX325	24872101	CHIP, METAL FILM, 1/16W 100 OHM J
RX330	24872821	CHIP, METAL FILM, 1/16W 820 OHM J
RX331	24872151	CHIP, METAL FILM, 1/16W 150 OHM J
RX332	24872821	CHIP, METAL FILM, 1/16W 820 OHM J
RX334	24872561	CHIP, METAL FILM, 1/16W 560 OHM J
RX341	24872223	CHIP, METAL FILM, 1/16W 22K OHM J
RX342	24872223	CHIP, METAL FILM, 1/16W 22K OHM J
RX345	24872101	CHIP, METAL FILM, 1/16W 100 OHM J
RX350	24872821	CHIP, METAL FILM, 1/16W 820 OHM J
RX351	24872121	CHIP, METAL FILM, 1/16W 120 OHM J
RX352	24872681	CHIP, METAL FILM, 1/16W 680 OHM J
RX354	24872561	CHIP, METAL FILM, 1/16W 560 OHM J
RX361	24872223	CHIP, METAL FILM, 1/16W 22K OHM J
RX362	24872223	CHIP, METAL FILM, 1/16W 22K OHM J
RX365	24872101	CHIP, METAL FILM, 1/16W 100 OHM J
RX370	24872821	CHIP, METAL FILM, 1/16W 820 OHM J
RX371	24872121	CHIP, METAL FILM, 1/16W 120 OHM J
RX372	24872681	CHIP, METAL FILM, 1/16W 680 OHM J
RX374	24872561	CHIP, METAL FILM, 1/16W 560 OHM J
RX402	24872101	CHIP, METAL FILM, 1/16W 100 OHM J
RX404	24872101	CHIP, METAL FILM, 1/16W 100 OHM J
RX406	24872101	CHIP, METAL FILM, 1/16W 100 OHM J
RX408	24872101	CHIP, METAL FILM, 1/16W 100 OHM J
RX410	24872101	CHIP, METAL FILM, 1/16W 100 OHM J
RX412	24872101	CHIP, METAL FILM, 1/16W 100 OHM J
RX421	24872221	CHIP, METAL FILM, 1/16W 220 OHM J
RX422	24872221	CHIP, METAL FILM, 1/16W 220 OHM J
RX423	24872221	CHIP, METAL FILM, 1/16W 220 OHM J
RX424	24872221	CHIP, METAL FILM, 1/16W 220 OHM J
RX425	24872221	CHIP, METAL FILM, 1/16W 220 OHM J
RX426	24872101	CHIP, METAL FILM, 1/16W 100 OHM J
RX427	24872221	CHIP, METAL FILM, 1/16W 220 OHM J
RX428	24872221	CHIP, METAL FILM, 1/16W 220 OHM J
RX429	24872221	CHIP, METAL FILM, 1/16W 220 OHM J
RX430	24872221	CHIP, METAL FILM, 1/16W 220 OHM J
RX431	24322478	METAL FILM 1W R47 J
RX621	24872182	CHIP, METAL FILM, 1/16W 1.8K OHM J
RX622	24872222	CHIP, METAL FILM, 1/16W 2.2K OHM J
RX623	24872101	CHIP, METAL FILM, 1/16W 100 OHM J
RX624	24872102	CHIP, METAL FILM, 1/16W 1K OHM J
RX626	24872222	CHIP, METAL FILM, 1/16W 2.2K OHM J
RX627	24872101	CHIP, METAL FILM, 1/16W 100 OHM J
RZ01	24011102	CHIP, METAL FILM, 1/20W 1K OHM J
RZ02	24011102	CHIP, METAL FILM, 1/20W 1K OHM J
RZ03	24011222	CHIP, METAL FILM, 1/20W 2.2K OHM J
RZ04	24872102	CHIP, METAL FILM, 1/16W 1K OHM J
RZ05	24011471	METAL FILM CHIP 1/20W 470 J
RZ06	24011331	METAL FILM CHIP 1/20W 330 J
RZ08	24011471	METAL FILM CHIP 1/20W 470 J
RZ13	24872102	CHIP, METAL FILM, 1/16W 1K OHM J
RZ14	24872102	CHIP, METAL FILM, 1/16W 1K OHM J
RZ15	24872102	CHIP, METAL FILM, 1/16W 1K OHM J
RZ17	24011391	METAL FILM CHIP 1/20W 390 J
RZ18	24011391	METAL FILM CHIP 1/20W 390 J
RZ29	24011101	CHIP, METAL FILM, 1/20W 100 OHM J
RZ30	24011101	CHIP, METAL FILM, 1/20W 100 OHM J

Location No.	Parts No.	Description
COILS & TRANSFORMERS		
L101	23221803	COIL, CHOKE, TLN3040D
L302	23248073	COIL, CHOKE, TLN3299D
L303	23248073	COIL, CHOKE, TLN3299D
L304	23103880	COIL, CHOKE, TEM2011Y
L310	23237975	COIL, PEAKING, TRF4101AC
L311	23237975	COIL, PEAKING, TRF4101AC
L401	23289560	COIL, PEAKING, TRF4560AF
L402	23248248	COIL, CHOKE, TLN3500AH
L403	23103880	COIL, CHOKE, TEM2011Y
L406	23248191	COIL, CHOKE, TLN3351AD
L407	23103775	COIL, FERRITE CHOKE, TEM2014
L408	23103775	COIL, FERRITE CHOKE, TEM2014
L409	23237975	COIL, PEAKING, TRF4101AC
L441	23233995	COIL, LINEARITY, TLN2215AG
L462	23231340	DEFLECTION YOKE, TDY707PDC (42WH18P)
L462	23231344	DEFLECTION YOKE, TDY707PDD (42WH18P)
L462	23231325	DEFLECTION YOKE, TDY707PS (50WH18P)
L463	23231340	DEFLECTION YOKE, TDY707PDC (42WH18P)
L463	23231344	DEFLECTION YOKE, TDY707PDD (42WH18P)
L463	23231325	DEFLECTION YOKE, TDY707PS (50WH18P)
L464	23231340	DEFLECTION YOKE, TDY707PDC (42WH18P)
L464	23231344	DEFLECTION YOKE, TDY707PDD (42WH18P)
L464	23231325	DEFLECTION YOKE, TDY707PS (50WH18P)
L472	23102441	MAGNET, CONVERGENCE, MAG1094
L473	23102441	MAGNET, CONVERGENCE, MAG1094
L474	23102441	MAGNET, CONVERGENCE, MAG1094
L501	23289470	COIL, PEAKING, TRF4470AF
L503	23289470	COIL, PEAKING, TRF4470AF
L504	23238714	COIL, PEAKING, TRF4100AJ
L505	23280022	COIL, PEAKING, TRF4101AZ
L506	23280022	COIL, PEAKING, TRF4101AZ
L510	23103852	COIL, FILTER, TEM2028AH
L511	23103845	COIL, COMMONMODE, TEM2030AY
L512	23103845	COIL, COMMONMODE, TEM2030AY
L514	23103852	COIL, FILTER, TEM2028AH
L515	23103845	COIL, COMMONMODE, TEM2030AY
L516	23103845	COIL, COMMONMODE, TEM2030AY
L605	23248073	COIL, CHOKE, TLN3299D
L671	23103887	INDUCTOR, CHIP BEAD 3A 220OHM
L672	23103887	INDUCTOR, CHIP BEAD 3A 220OHM
L673	23103887	INDUCTOR, CHIP BEAD 3A 220OHM
L674	23103887	INDUCTOR, CHIP BEAD 3A 220OHM
L701	23289840	COIL, PEAKING, TRF4100AT
L702	23261974	COIL, FERRITE BEAD, HC5-035
L704	23103859	COIL, CHOKE, TEM2011
L705	23103859	COIL, CHOKE, TEM2011
L764	23103859	COIL, CHOKE, TEM2011
L765	23103859	COIL, CHOKE, TEM2011
L766	23261974	COIL, FERRITE BEAD, HC5-035
L769	23289840	COIL, PEAKING, TRF4100AT
L780	23289840	COIL, PEAKING, TRF4100AT
L781	23103859	COIL, CHOKE, TEM2011
L782	23103859	COIL, CHOKE, TEM2011
L783	23261974	COIL, FERRITE BEAD, HC5-035
L801	23217472	TRANSFORMER, CHOKE TPW2027AZ
L821	23103880	COIL, CHOKE, TEM2011Y
L822	23103880	COIL, CHOKE, TEM2011Y
L828	70211045	COIL, CHOKE, 0.02MH-2.5, 20MMH
L829	70211045	COIL, CHOKE, 0.02MH-2.5, 20MMH
L840	23289842	COIL, PEAKING, TRF4220AT
L841	23289842	COIL, PEAKING, TRF4220AT
L850	23103880	COIL, CHOKE, TEM2011Y
L851	23103880	COIL, CHOKE, TEM2011Y
L852	23248195	COIL, CHOKE, TLN3441AT

Location No.	Parts No.	Description
L853	23248195	COIL, CHOKE, TLN3441AT
L854	70211045	COIL, CHOKE, 0.02MH-2.5, 20MMH
L855	70211045	COIL, CHOKE, 0.02MH-2.5, 20MMH
L861	23103880	COIL, CHOKE, TEM2011Y
L862	23103880	COIL, CHOKE, TEM2011Y
L881	23103880	COIL, CHOKE, TEM2011Y
L882	23103880	COIL, CHOKE, TEM2011Y
L885	23248073	COIL, CHOKE, TLN3299D
L888	23103880	COIL, CHOKE, TEM2011Y
L889	23103880	COIL, CHOKE, TEM2011Y
L891	23103880	COIL, CHOKE, TEM2011Y
L892	23103880	COIL, CHOKE, TEM2011Y
L893	23103880	COIL, CHOKE, TEM2011Y
L894	23103880	COIL, CHOKE, TEM2011Y
L895	70211045	COIL, CHOKE, 0.02MH-2.5, 20MMH
L896	70211045	COIL, CHOKE, 0.02MH-2.5, 20MMH
L897	23222694	COIL, HORIZ WIDTH, TLN2026
L898	23222694	COIL, HORIZ WIDTH, TLN2026
L901	23237975	COIL, PEAKING, TRF4101AC
L903	23289845	COIL, PEAKING 68.00MMHJ COLTRF4680AT
L911	23289840	COIL, PEAKING, TRF4100AT
L912	23289845	COIL, PEAKING 68.00MMHJ COLTRF4680AT
L913	23238714	COIL, PEAKING, TRF4100AJ
L915	23289834	COIL, PEAKING, TRF41R0AT
L922	23289845	COIL, PEAKING 68.00MMHJ COLTRF4680AT
L925	23289834	COIL, PEAKING, TRF41R0AT
L961	23238714	COIL, PEAKING, TRF4100AJ
L962	23289834	COIL, PEAKING, TRF41R0AT
L4401	23289470	COIL, PEAKING, TRF4470AF
L7701	23103880	COIL, CHOKE, TEM2011Y
L7702	23103880	COIL, CHOKE, TEM2011Y
L7703	23103880	COIL, CHOKE, TEM2011Y
L7704	23103880	COIL, CHOKE, TEM2011Y
L7705	23103880	COIL, CHOKE, TEM2011Y
L7706	23103880	COIL, CHOKE, TEM2011Y
L7708	23103880	COIL, CHOKE, TEM2011Y
L7709	23103880	COIL, CHOKE, TEM2011Y
L7712	23248195	COIL, CHOKE, TLN3441AT
L7713	23248195	COIL, CHOKE, TLN3441AT
LA01	23289840	COIL, PEAKING, TRF4100AT
LC01	23103828	INDUCTOR, BEAD, TEM2121M
LC02	23103828	INDUCTOR, BEAD, TEM2121M
LC03	23103828	INDUCTOR, BEAD, TEM2121M
LC04	23103828	INDUCTOR, BEAD, TEM2121M
LC05	23103828	INDUCTOR, BEAD, TEM2121M
LC06	23103828	INDUCTOR, BEAD, TEM2121M
LC07	23238562	COIL, PEAKING, TRF4109AJ
LC08	23238562	COIL, PEAKING, TRF4109AJ
LC09	23103828	INDUCTOR, BEAD, TEM2121M
LC10	23103828	INDUCTOR, BEAD, TEM2121M
LC11	23103828	INDUCTOR, BEAD, TEM2121M
LC12	23238562	COIL, PEAKING, TRF4109AJ
LC12	23103828	INDUCTOR, BEAD, TEM2121M
LC20	23103832	INDUCTOR, BEAD, TEM2125M
LC21	23103775	COIL, FERRITE CHOKE, TEM2014
LC22	23103775	COIL, FERRITE CHOKE, TEM2014
LC43	23103828	INDUCTOR, BEAD, TEM2121M
LC45	23238562	COIL, PEAKING, TRF4109AJ
LC66	23289100	COIL, PEAKING, TRF4100AF
LC83	23289109	COIL, PEAKING, TRF41R0AF
LD81	23103828	INDUCTOR, BEAD, TEM2121M
LD82	23289470	COIL, PEAKING, TRF4470AF
LD84	23103845	COIL, COMMONMODE, TEM2030AY
LF01	23103827	INDUCTOR, BEAD TEM2120M
LF02	23103827	INDUCTOR, BEAD TEM2120M

Location No.	Parts No.	Description
LF03	23103887	INDUCTOR, CHIP BEAD 3A 220OHM
LF04	23103887	INDUCTOR, CHIP BEAD 3A 220OHM
LF05	23103828	INDUCTOR, BEAD, TEM2121M
LF06	23103828	INDUCTOR, BEAD, TEM2121M
LF07	23103828	INDUCTOR, BEAD, TEM2121M
LF08	23103828	INDUCTOR, BEAD, TEM2121M
LF09	23289151	COIL, PEAKING, TRF4151AF
LF10	23289100	COIL, PEAKING, TRF4100AF
LF11	23103827	INDUCTOR, BEAD TEM2120M
LF12	23103828	INDUCTOR, BEAD, TEM2121M
LF13	23103828	INDUCTOR, BEAD, TEM2121M
LF14	23103828	INDUCTOR, BEAD, TEM2121M
LF15	23103828	INDUCTOR, BEAD, TEM2121M
LF16	23103828	INDUCTOR, BEAD, TEM2121M
LF17	23103828	INDUCTOR, BEAD, TEM2121M
LF18	23103828	INDUCTOR, BEAD, TEM2121M
LF19	23103887	INDUCTOR, CHIP BEAD 3A 220OHM
LF20	23103827	INDUCTOR, BEAD TEM2120M
LF21	23103827	INDUCTOR, BEAD TEM2120M
LG03	23103880	COIL, CHOKE, TEM2011Y
LG08	23103880	COIL, CHOKE, TEM2011Y
LG09	23103880	COIL, CHOKE, TEM2011Y
LG10	23103880	COIL, CHOKE, TEM2011Y
LG11	23103880	COIL, CHOKE, TEM2011Y
LG24	23280016	COIL, PEAKING, TRF4100AZ
LG25	23289840	COIL, PEAKING, TRF4100AT
LG102	23103828	INDUCTOR, BEAD, TEM2121M
LH001	23103864	FILTER, CHIP-FERRITE-CHOKE-30, TEM2103T
LH002	23103864	FILTER, CHIP-FERRITE-CHOKE-30, TEM2103T
LH003	23103859	COIL, CHOKE, TEM2011
LH004	23103859	COIL, CHOKE, TEM2011
LH005	23103859	COIL, CHOKE, TEM2011
LH007	23103795	IMPEDER, MMZ2012S301A
LH009	23103795	IMPEDER, MMZ2012S301A
LH010	23103795	IMPEDER, MMZ2012S301A
LH012	23103859	COIL, CHOKE, TEM2011
LH062	23103864	FILTER, CHIP-FERRITE-CHOKE-30, TEM2103T
LH063	23103864	FILTER, CHIP-FERRITE-CHOKE-30, TEM2103T
LH064	23103864	FILTER, CHIP-FERRITE-CHOKE-30, TEM2103T
LH065	23103864	FILTER, CHIP-FERRITE-CHOKE-30, TEM2103T
LH066	23103864	FILTER, CHIP-FERRITE-CHOKE-30, TEM2103T
LH067	23103864	FILTER, CHIP-FERRITE-CHOKE-30, TEM2103T
LH120	23103864	FILTER, CHIP-FERRITE-CHOKE-30, TEM2103T
LH122	23103864	FILTER, CHIP-FERRITE-CHOKE-30, TEM2103T
LH123	23103864	FILTER, CHIP-FERRITE-CHOKE-30, TEM2103T
LH125	23103864	FILTER, CHIP-FERRITE-CHOKE-30, TEM2103T
LH126	23103864	FILTER, CHIP-FERRITE-CHOKE-30, TEM2103T
LR01	23289109	COIL, PEAKING, TRF41R0AF
LR02	23289109	COIL, PEAKING, TRF41R0AF
LV02	23103845	COIL, COMMONMODE, TEM2030AY
LV09	23280022	COIL, PEAKING, TRF4101AZ
LV42	23289840	COIL, PEAKING, TRF4100AT
LV43	23289840	COIL, PEAKING, TRF4100AT
LX101	23103822	INDUCTOR, BEAD, TEM2117T
LX104	23245827	COIL CHIP 5.6MMHJ
LX105	23103822	INDUCTOR, BEAD, TEM2117T
LX106	23103822	INDUCTOR, BEAD, TEM2117T
LX107	23103822	INDUCTOR, BEAD, TEM2117T
LX110	23103822	INDUCTOR, BEAD, TEM2117T
LX143	23245835	COIL, CHIP-INDUCTOR-27MMHJ, TRF4270CB
LX144	23103822	INDUCTOR, BEAD, TEM2117T
LX145	23103822	INDUCTOR, BEAD, TEM2117T
LX150	23103822	INDUCTOR, BEAD, TEM2117T
LX152	23103822	INDUCTOR, BEAD, TEM2117T
LX153	23103822	INDUCTOR, BEAD, TEM2117T

Location No.	Parts No.	Description
LX163	23245835	COIL, CHIP-INDUCTOR-27MMHJ, TRF4270CB
LX201	23103886	INDUCTOR, CHIP BEAD 3A 60OHM
LX221	23103822	INDUCTOR, BEAD, TEM2117T
LX222	23103822	INDUCTOR, BEAD, TEM2117T
LX223	23103822	INDUCTOR, BEAD, TEM2117T
LX226	23103822	INDUCTOR, BEAD, TEM2117T
LX227	23103822	INDUCTOR, BEAD, TEM2117T
LX231	23103822	INDUCTOR, BEAD, TEM2117T
LX232	23103822	INDUCTOR, BEAD, TEM2117T
LX233	23103822	INDUCTOR, BEAD, TEM2117T
LX236	23103822	INDUCTOR, BEAD, TEM2117T
LX237	23103822	INDUCTOR, BEAD, TEM2117T
LX261	23103822	INDUCTOR, BEAD, TEM2117T
LX271	23103822	INDUCTOR, BEAD, TEM2117T
LX301	23103822	INDUCTOR, BEAD, TEM2117T
LX321	23103822	INDUCTOR, BEAD, TEM2117T
LX322	23245825	COIL, CHIP-INDUCTOR-3.9MMHJ, TRF43R9CB
LX342	23245826	COIL, CHIP-INDUCTOR-4.7MMHJ, TRF44R7CB
LX362	23245826	COIL, CHIP-INDUCTOR-4.7MMHJ, TRF44R7CB
LX401	23103886	INDUCTOR, CHIP BEAD 3A 60OHM
LX402	23103822	INDUCTOR, BEAD, TEM2117T
LX403	23103822	INDUCTOR, BEAD, TEM2117T
LX404	23103822	INDUCTOR, BEAD, TEM2117T
LX405	23103822	INDUCTOR, BEAD, TEM2117T
LX407	23103822	INDUCTOR, BEAD, TEM2117T
LX421	23238562	COIL, PEAKING, TRF4109AJ
LX422	23238562	COIL, PEAKING, TRF4109AJ
LX423	23238562	COIL, PEAKING, TRF4109AJ
LX424	23238562	COIL, PEAKING, TRF4109AJ
LX425	23238562	COIL, PEAKING, TRF4109AJ
LX426	23238562	COIL, PEAKING, TRF4109AJ
LX427	23238562	COIL, PEAKING, TRF4109AJ
LX428	23238718	COIL, PEAKING, TRF4479AJ
LX429	23238718	COIL, PEAKING, TRF4479AJ
LX430	23238562	COIL, PEAKING, TRF4109AJ
LX431	23103880	COIL, CHOKE, TEM2011Y
LX601	23103822	INDUCTOR, BEAD, TEM2117T
LX611	23103822	INDUCTOR, BEAD, TEM2117T
LZ01	23238710	COIL, PEAKING, TRF4220AJ
LZ02	23280022	COIL, PEAKING, TRF4101AZ
LZ03	23280022	COIL, PEAKING, TRF4101AZ
LZ04	23289844	COIL, PEAKING, TRF4470AT
LZ05	23289844	COIL, PEAKING, TRF4470AT
LZ06	23103852	COIL, FILTER, TEM2028AH
LZ07	23103827	INDUCTOR, BEAD TEM2120M
LZ09	23103827	INDUCTOR, BEAD TEM2120M
LZ10	23103827	INDUCTOR, BEAD TEM2120M
T400	23224364	TRANSFORMER, TLN2168AH
T401	23224371	TRANSFORMER, HORIZ DRIVE, TLN1080AH
T461A	23192961	ANODE CAP ASSY, TCC5605AU
⚠ T461Z	23236685	TRANSFORMER, FLY-BACK TFB3089ZD
T801	23211717	COIL, LINE FILTER, TRF3164AM
T821	23211661	COIL, LINE FILTER, TRF3192
T822	23211661	COIL, LINE FILTER, TRF3192
T824	23217438	TRANSFORMER, CONVERTER TPW3431AR
⚠ T862	23217467	TRANSFORMER, CONVERTER, TPW3450AS
TG01	23217466	TRANSFORMER, CONVERTER TPW3449AM
TG02	23211661	COIL, LINE FILTER, TRF3192
SEMICONDUCTORS		
Q201	23114433	TRANSISTOR, 2SC1815-Y
Q206	23314993	TRANSISTOR, 2SC4081 Q

Location No.	Parts No.	Description
Q237	23314993	TRANSISTOR, 2SC4081 Q
Q241	23114756	TRANSISTOR, 2SC2482
Q274	23314993	TRANSISTOR, 2SC4081 Q
Q301	23319787	IC, LA7833S
Q301B	70391355	SCREW, 3X8MM
Q302	B0384625	IC, TA8859CP
Q304	B0351501	IC, TA75902P(J)
Q305	23314994	TRANSISTOR, 2SA1576A106
Q306	B0351501	IC, TA75902P(J)
Q307	23314993	TRANSISTOR, 2SC4081 Q
Q370	23314993	TRANSISTOR, 2SC4081 Q
Q371	23314994	TRANSISTOR, 2SA1576A106
Q372	23314993	TRANSISTOR, 2SC4081 Q
Q400	23205079	TRANSISTOR, VCBO=1500V IC=50MA 2SC4686A
Q402	A6064650	TRANSISTOR, 2SK941
Q404	A6374144	TRANSISTOR, 2SC5570(FA)
Q404B	A8012650	INSULATOR, TRANSISTOR, AC263
Q404D	72471082	SCREW, 3X10MM
Q405	23314994	TRANSISTOR, 2SA1576A106
Q406	23314993	TRANSISTOR, 2SC4081 Q
Q420	23114756	TRANSISTOR, 2SC2482
Q425	23205031	TRANSISTOR, 2SK2920
Q426	B0347500	IC, TA75358P
Q427	70128158	IC, BA10393
Q428	23314993	TRANSISTOR, 2SC4081 Q
Q501	B01A2334	IC, TB1274F(J)
Q502	23000821	IC, YUV PICTURE IMPROVEMENT
Q504	23314994	TRANSISTOR, 2SA1576A106
Q505	23314994	TRANSISTOR, 2SA1576A106
Q506	23114433	TRANSISTOR, 2SC1815-Y
Q507	23114501	TRANSISTOR, RN1402
Q510	23000584	IC, TA1316AN
Q581	23314993	TRANSISTOR, 2SC4081 Q
Q582	23314993	TRANSISTOR, 2SC4081 Q
Q583	23314993	TRANSISTOR, 2SC4081 Q
Q584	23314993	TRANSISTOR, 2SC4081 Q
Q585	23314993	TRANSISTOR, 2SC4081 Q
Q586	23314993	TRANSISTOR, 2SC4081 Q
Q587	23314993	TRANSISTOR, 2SC4081 Q
Q588	23314993	TRANSISTOR, 2SC4081 Q
Q589	23314994	TRANSISTOR, 2SA1576A106
Q610	B0376885	IC, TA8216H
Q610B	70391355	SCREW, 3X8MM
Q611	A6359871	TRANSISTOR, 2SC3326B
Q612	A6359871	TRANSISTOR, 2SC3326B
Q613	23314993	TRANSISTOR, 2SC4081 Q
Q614	23114499	TRANSISTOR, RN1404(TE85L
Q615	23314994	TRANSISTOR, 2SA1576A106
Q616	23314994	TRANSISTOR, 2SA1576A106
Q617	B0350000	IC, TA5458P
Q618	23314993	TRANSISTOR, 2SC4081 Q
Q619	23314993	TRANSISTOR, 2SC4081 Q
Q620	A6014041	TRANSISTOR, RN2404
Q621	A6359871	TRANSISTOR, 2SC3326B
Q622	A6359871	TRANSISTOR, 2SC3326B
Q623	A6014041	TRANSISTOR, RN2404
Q624	A6359871	TRANSISTOR, 2SC3326B
Q625	A6014041	TRANSISTOR, RN2404
Q626	23314993	TRANSISTOR, 2SC4081 Q
Q627	A6359871	TRANSISTOR, 2SC3326B
Q628	A6359871	TRANSISTOR, 2SC3326B
Q629	A6359871	TRANSISTOR, 2SC3326B
Q630	B0376856	IC, TA8211AH
Q630B	70391355	SCREW, 3X8MM

Location No.	Parts No.	Description
Q640	B0376856	IC, TA8211AH
Q640B	70391355	SCREW, 3X8MM
Q701	23319808	IC, M5218AP
Q702	23114433	TRANSISTOR, 2SC1815-Y
Q703	A6531140	TRANSISTOR, 2SA817-Y
Q704	A6314440	TRANSISTOR, 2SC1627-Y
Q705	A6314440	TRANSISTOR, 2SC1627-Y
Q706	A6531140	TRANSISTOR, 2SA817-Y
Q706	23114433	TRANSISTOR, 2SC1815-Y
Q707	23114437	TRANSISTOR, 2SC752GTM-Y
Q707	23205109	TRANSISTOR, NPN VCBO=100V KTC2028-Y
Q707B	23035310	SCREW, BTB3X10SZN
Q708	23205107	TRANSISTOR, PNP VCBO=-100V KTA1049-Y
Q708B	23035310	SCREW, BTB3X10SZN
Q709	23114433	TRANSISTOR, 2SC1815-Y
Q710	23114425	TRANSISTOR, 2SA1015-Y(TE
Q711	23319808	IC, M5218AP
Q711	23314701	TRANSISTOR, 2SB1186A, E
Q711B	70391355	SCREW, 3X8MM
Q712	23114433	TRANSISTOR, 2SC1815-Y
Q712	23314705	TRANSISTOR, 2SD1763A, V07 E
Q712B	70391355	SCREW, 3X8MM
Q713	A6531140	TRANSISTOR, 2SA817-Y
Q714	A6314440	TRANSISTOR, 2SC1627-Y
Q715	A6314440	TRANSISTOR, 2SC1627-Y
Q716	A6531140	TRANSISTOR, 2SA817-Y
Q717	23205109	TRANSISTOR, NPN VCBO=100V KTC2028-Y
Q717B	23035310	SCREW, BTB3X10SZN
Q718	23205107	TRANSISTOR, PNP VCBO=-100V KTA1049-Y
Q718B	23035310	SCREW, BTB3X10SZN
Q719	23114433	TRANSISTOR, 2SC1815-Y
Q720	23114433	TRANSISTOR, 2SC1815-Y
Q722	23114433	TRANSISTOR, 2SC1815-Y
Q723	A6531140	TRANSISTOR, 2SA817-Y
Q724	A6314440	TRANSISTOR, 2SC1627-Y
Q725	A6314440	TRANSISTOR, 2SC1627-Y
Q726	A6531140	TRANSISTOR, 2SA817-Y
Q727	23205109	TRANSISTOR, NPN VCBO=100V KTC2028-Y
Q727B	23035310	SCREW, BTB3X10SZN
Q728	23205107	TRANSISTOR, PNP VCBO=-100V KTA1049-Y
Q728B	23035310	SCREW, BTB3X10SZN
Q732	23114433	TRANSISTOR, 2SC1815-Y
Q733	A6531140	TRANSISTOR, 2SA817-Y
Q734	A6314440	TRANSISTOR, 2SC1627-Y
Q735	A6314440	TRANSISTOR, 2SC1627-Y
Q736	A6531140	TRANSISTOR, 2SA817-Y
Q737	23205109	TRANSISTOR, NPN VCBO=100V KTC2028-Y
Q737B	23035310	SCREW, BTB3X10SZN
Q738	23205107	TRANSISTOR, PNP VCBO=-100V KTA1049-Y
Q738B	23035310	SCREW, BTB3X10SZN
Q741	23319808	IC, M5218AP
Q742	23114433	TRANSISTOR, 2SC1815-Y
Q743	A6531140	TRANSISTOR, 2SA817-Y
Q744	A6314440	TRANSISTOR, 2SC1627-Y
Q745	A6314440	TRANSISTOR, 2SC1627-Y
Q746	A6531140	TRANSISTOR, 2SA817-Y
Q747	23205109	TRANSISTOR, NPN VCBO=100V KTC2028-Y
Q747B	23035310	SCREW, BTB3X10SZN
Q748	23205107	TRANSISTOR, PNP VCBO=-100V KTA1049-Y
Q748B	23035310	SCREW, BTB3X10SZN
Q749	A6314440	TRANSISTOR, 2SC1627-Y
Q750	A6314440	TRANSISTOR, 2SC1627-Y
Q751	A6531140	TRANSISTOR, 2SA817-Y
Q752	23114433	TRANSISTOR, 2SC1815-Y
Q753	A6531140	TRANSISTOR, 2SA817-Y

Location No.	Parts No.	Description
Q754	23904268	IC, PQ05RR1
Q756	23318840	IC, AN79M05F
Q756B	70391356	SCREW, BITTB3X10 SZN
Q760	23114425	TRANSISTOR, 2SA1015-Y(TE
Q760	23205109	TRANSISTOR, NPN VCBO=100V KTC2028-Y
Q760B	23035310	SCREW, BTB3X10SZN
Q761	B0349260	IC, TA75393P
Q761	23314701	TRANSISTOR, 2SB1186A, E
Q761B	70391355	SCREW, 3X8MM
Q762	B0470188	IC, TC4066BP(N)
Q763	23114735	TRANSISTOR, 2SA102-Y(C)
Q764	B0485895	IC, TC74HC14AP
Q765	23205107	TRANSISTOR, PNP VCBO=-100V KTA1049-Y
Q765B	23035310	SCREW, BTB3X10SZN
Q767	B0470188	IC, TC4066BP(N)
Q769	23114433	TRANSISTOR, 2SC1815-Y
Q771	23314705	TRANSISTOR, 2SD1763A, V07 E
Q771B	70391355	SCREW, 3X8MM
Q773	23314993	TRANSISTOR, 2SC4081 Q
Q774	23314993	TRANSISTOR, 2SC4081 Q
Q775	A6531140	TRANSISTOR, 2SA817-Y
Q776	23114501	TRANSISTOR, RN1402
Q779	23114433	TRANSISTOR, 2SC1815-Y
Q781	23114433	TRANSISTOR, 2SC1815-Y
Q782	23114425	TRANSISTOR, 2SA1015-Y(TE
Q783	23114433	TRANSISTOR, 2SC1815-Y
Q784	23314701	TRANSISTOR, 2SB1186A, E
Q784B	70391355	SCREW, 3X8MM
Q785	23314705	TRANSISTOR, 2SD1763A, V07 E
Q785B	70391355	SCREW, 3X8MM
Q790	23205014	TRANSISTOR, HIGH SPEED SWICH 2SC4667-O
Q791	23314994	TRANSISTOR, 2SA1576A106
Q792	23314993	TRANSISTOR, 2SC4081 Q
Q793	23205031	TRANSISTOR, 2SK2920
Q794	23205014	TRANSISTOR, HIGH SPEED SWICH 2SC4667-O
Q796	23314993	TRANSISTOR, 2SC4081 Q
Q797	23205098	TRANSISTOR, FET VDSS=-60V 2SJ377
Q798	23314993	TRANSISTOR, 2SC4081 Q
Q801	23135015	IC, STR-Z4369
Q821	23135008	IC, STR-F6668B
Q821B	70391356	SCREW, BITTB3X10 SZN
Q822	23904427	IC, PHOTO COUPLER, TLP621(GR-LF2
Q823	23905251	IC, SE024N
Q830	23905977	IC, PQ09RD11
Q830B	70391355	SCREW, 3X8MM
Q831	23905977	IC, PQ09RD11
Q831B	70391355	SCREW, 3X8MM
Q832	23905976	IC, PQ05RD11
Q832B	70391355	SCREW, 3X8MM
Q833	23905976	IC, PQ05RD11
Q833B	70391355	SCREW, 3X8MM
Q840	23904268	IC, PQ05RR1
Q840B	70391355	SCREW, 3X8MM
Q842	23114433	TRANSISTOR, 2SC1815-Y
Q843	23114433	TRANSISTOR, 2SC1815-Y
Q848	23314444	TRANSISTOR, 2SC4721, P
⚠ Q862	23904427	IC, PHOTO COUPLER, TLP621(GR-LF2
Q902	23114433	TRANSISTOR, 2SC1815-Y
Q912	23114433	TRANSISTOR, 2SC1815-Y
Q913	23114425	TRANSISTOR, 2SA1015-Y(TE
Q914	23114433	TRANSISTOR, 2SC1815-Y
Q922	23114433	TRANSISTOR, 2SC1815-Y
Q961	23114433	TRANSISTOR, 2SC1815-Y

Location No.	Parts No.	Description
Q962	23114425	TRANSISTOR, 2SA1015-Y(TE
Q963	23114433	TRANSISTOR, 2SC1815-Y
Q964	23114425	TRANSISTOR, 2SA1015-Y(TE
Q965	23114433	TRANSISTOR, 2SC1815-Y
Q966	23114425	TRANSISTOR, 2SA1015-Y(TE
Q968	23114433	TRANSISTOR, 2SC1815-Y
Q971	23114425	TRANSISTOR, 2SA1015-Y(TE
Q972	23114425	TRANSISTOR, 2SA1015-Y(TE
Q973	23114425	TRANSISTOR, 2SA1015-Y(TE
Q974	23114433	TRANSISTOR, 2SC1815-Y
Q975	23114437	TRANSISTOR, 2SC752GTM-Y
Q2104	23114425	TRANSISTOR, 2SA1015-Y(TE
Q2105	23114425	TRANSISTOR, 2SA1015-Y(TE
Q2106	23114425	TRANSISTOR, 2SA1015-Y(TE
Q4451	23314475	TRANSISTOR, 2SC2712-Y
Q4452	A6004061	TRANSISTOR, RN1406
Q4453	A6004061	TRANSISTOR, RN1406
Q4454	A6004061	TRANSISTOR, RN1406
Q4460	23314993	TRANSISTOR, 2SC4081 Q
QA01	23009013	IC, 750010-169S
QA02	23906642	IC, AT24C64-10PC
QA05	23205014	TRANSISTOR, HIGH SPEED SWICH 2SC4667-O
QA61	23000864	IC, 256K BIT CMOS EEPROM AT24C256-10PC
QA82	23000592	IC, 2IN-1OUTSW 6DBAMP CLP MM1504XN
QA83	23114499	TRANSISTOR, RN1404(TE85L
QB01	23314791	TRANSISTOR, VCEO=-50V TO-92 2PA1015Y
QB03	23314791	TRANSISTOR, VCEO=-50V TO-92 2PA1015Y
QB04	23314994	TRANSISTOR, 2SA1576A106
QB04	23314791	TRANSISTOR, VCEO=-50V TO-92 2PA1015Y
QB05	23314993	TRANSISTOR, 2SC4081 Q
QB06	23314994	TRANSISTOR, 2SA1576A106
QB42	23314994	TRANSISTOR, 2SA1576A106
QB43	23314993	TRANSISTOR, 2SC4081 Q
QB81	A6359871	TRANSISTOR, 2SC3326B
QB82	A6359871	TRANSISTOR, 2SC3326B
QB83	23314994	TRANSISTOR, 2SA1576A106
QB92	23314993	TRANSISTOR, 2SC4081 Q
QB93	23314994	TRANSISTOR, 2SA1576A106
QB94	23314994	TRANSISTOR, 2SA1576A106
QB95	23314994	TRANSISTOR, 2SA1576A106
QB96	23314994	TRANSISTOR, 2SA1576A106
QD81	23314993	TRANSISTOR, 2SC4081 Q
QD83	23314993	TRANSISTOR, 2SC4081 Q
QF01	23000817	IC, TELETEXT DECODER M2 SDA6000
QF02	23906770	IC, +3.3V 5% REG. TO252-3 BA033FP
QF03	23000803	IC, +2.5V 2% REG.SC-63 UPC2925T
QF04	23000884	IC, 4MX16 3.3V SYN DRAM HY57V641620HG
QF04	23000825	IC, V641620HGT-P
QF05	23906367	IC, PST9146NL
QF09	23205014	TRANSISTOR, HIGH SPEED SWICH 2SC4667-O
QF13	23000833	IC, ROM 256KX16BIT FLASH ROM BM29LV400BC-7
QF14	23000832	IC, ROM 256KX16BIT FLASH ROM MBM29LV400TC-
QF20	23000862	IC, 8K BIT CMOS EEPROM AT24C08N-10SC
QF24	23205099	TRANSISTOR, FET VDSS=60V RK7002
QF25	23205099	TRANSISTOR, FET VDSS=60V RK7002
QF71	23314994	TRANSISTOR, 2SA1576A106
QG01	23135014	IC, HYBRID VDSS=650V STR-G5551
QG01B	70391355	SCREW, 3X8MM
QG36	23314141	TRANSISTOR, 2SC3852

Location No.	Parts No.	Description
QG36B	70391355	SCREW, 3X8MM
QG37	23314791	TRANSISTOR, VCEO=-50V TO-92 2PA1015Y
QG38	23314794	TRANSISTOR, VCEO=50V TO-92 2PC1815Y
QH001	B01B4088	IC, TC190C06A301
QH004	23319595	IC, TC74HC244AF
QH005	23905013	IC, TLC2932IPW
QH006	23906908	IC, MC33078D
QH120	23318897	IC, PCM56P-L,
QH121	23318897	IC, PCM56P-L,
QH140	23318897	IC, PCM56P-L,
QH141	23318897	IC, PCM56P-L,
QH160	23318897	IC, PCM56P-L,
QH161	23318897	IC, PCM56P-L,
QH170	23906909	IC, MC33079D
QH171	23906909	IC, MC33079D
QH172	23906909	IC, MC33079D
QH173	23906924	IC, CAT24WC16P
QH174	23906924	IC, CAT24WC16P
QH175	23906924	IC, CAT24WC16P
QH176	23318977	IC, MC14052BF
QR01	23009037	IC, OSD 28SDIP 512CHR MB90096P-G-23
QR03	23314994	TRANSISTOR, 2SA1576A106
QR35	23314993	TRANSISTOR, 2SC4081 Q
QR36	23314993	TRANSISTOR, 2SC4081 Q
QR38	23314993	TRANSISTOR, 2SC4081 Q
QR40	23314993	TRANSISTOR, 2SC4081 Q
QS01	A6359871	TRANSISTOR, 2SC3326B
QS02	A6359871	TRANSISTOR, 2SC3326B
QS03	23314993	TRANSISTOR, 2SC4081 Q
QS04	23314993	TRANSISTOR, 2SC4081 Q
QS05	A6359871	TRANSISTOR, 2SC3326B
QS06	A6359871	TRANSISTOR, 2SC3326B
QS07	A6359871	TRANSISTOR, 2SC3326B
QS08	A6359871	TRANSISTOR, 2SC3326B
QS09	A6014041	TRANSISTOR, RN2404
QV01	23906887	IC, AV-SW IC QFP64PIN CXA2069Q
QV02	23314993	TRANSISTOR, 2SC4081 Q
QV03	23314993	TRANSISTOR, 2SC4081 Q
QV04	23314993	TRANSISTOR, 2SC4081 Q
QV06	23314994	TRANSISTOR, 2SA1576A106
QV09	23114433	TRANSISTOR, 2SC1815-Y
QV12	23114433	TRANSISTOR, 2SC1815-Y
QV14	23114433	TRANSISTOR, 2SC1815-Y
QX01	23906921	IC, NR+FRAME DOUBLE SCAN TC90A61F
QX03	23905013	IC, TLC2932IPW
QX04	23906951	IC, SN74AHCT1G32DCK
QX05	23906951	IC, SN74AHCT1G32DCK
QX07	23905939	IC, TLC2933IPW
QX08	23906951	IC, SN74AHCT1G32DCK
QX09	23906951	IC, SN74AHCT1G32DCK
QX11	23906318	IC,9BIT A/D CONVERTER ADS932E
QX12	23906318	IC,9BIT A/D CONVERTER ADS932E
QX15	23314345	TRANSISTOR, IMZ1
QX16	23314345	TRANSISTOR, IMZ1
QX17	23314345	TRANSISTOR, IMZ1
QX18	23314345	TRANSISTOR, IMZ1
QX19	A6541132	TRANSISTOR, 2SA1162-(Y)
QX20	23904676	IC, L-MOS BILATERAL SW. SSOP5P TC7S66F
QX22	23314345	TRANSISTOR, IMZ1
QX24	23314345	TRANSISTOR, IMZ1
QX25	23000197	IC, SN74AHC2G53HDCT
QX26	A6541132	TRANSISTOR, 2SA1162-(Y)
QX27	23904676	IC, L-MOS BILATERAL SW. SSOP5P TC7S66F

Location No.	Parts No.	Description
QX29	23314345	TRANSISTOR, IMZ1
QX31	23314345	TRANSISTOR, IMZ1
QX33	A6541132	TRANSISTOR, 2SA1162-(Y)
QX34	23904676	IC, L-MOS BILATERAL SW. SSOP5P TC7S66F
QX35	23314345	TRANSISTOR, IMZ1
QX37	23314475	TRANSISTOR, 2SC2712-Y
QX38	23314475	TRANSISTOR, 2SC2712-Y
QX39	23314475	TRANSISTOR, 2SC2712-Y
QX41	23314475	TRANSISTOR, 2SC2712-Y
QX42	23314475	TRANSISTOR, 2SC2712-Y
QX44	23314475	TRANSISTOR, 2SC2712-Y
QX45	23314475	TRANSISTOR, 2SC2712-Y
QX47	23314475	TRANSISTOR, 2SC2712-Y
QX48	23314475	TRANSISTOR, 2SC2712-Y
QX49	23000095	IC, HCMOS DUAL BUFFERS/DRIVERS SN74AHC2G241HDCT
QX50	70129666	IC, IC-HCT TC74HCT541AF TC74HCT541AF
QX51	23906770	IC, +3.3V 5% REG. TO252-3 BA033FP
QX52	23905927	IC, TC7SH32FU(BRA
QX53	23905927	IC, TC7SH32FU(BRA
QX54	23114502	TRANSISTOR, RN1401
QX55	B0370002	IC, +5V REG I0=40MA TA78L05F TE12R
QX56	A6541132	TRANSISTOR, 2SA1162-(Y)
QX57	23114502	TRANSISTOR, RN1401
QX58	23114502	TRANSISTOR, RN1401
QX61	23000965	IC, HY57V161610DTC-8
QX62	23000965	IC, HY57V161610DTC-8
QX63	23314344	TRANSISTOR, IMX1
QZ01	23000796	IC, CMOS MULTI COMB SOP28 TC90A69F(ELP)
QZ02	23314993	TRANSISTOR, 2SC4081 Q
QZ04	23314994	TRANSISTOR, 2SA1576A106
QZ05	23314994	TRANSISTOR, 2SA1576A106
QZ07	23314994	TRANSISTOR, 2SA1576A106
QZ08	23314993	TRANSISTOR, 2SC4081 Q
D101	23316755	DIODE, ZENER VZ30.90-32.50 DO34 MTZ J 33C
D301	23357165	DIODE, ZENER, UDZS7.5B
D302	23118094	DIODE, EU2A
D303	23118041	DIODE, MA111
D304	23316794	DIODE, SC570A
D305	23118822	DIODE, ERB12-02
D306	23118822	DIODE, ERB12-02
D308	23118041	DIODE, MA111
D370	23118041	DIODE, MA111
D401	23118094	DIODE, EU2A
D402	23118094	DIODE, EU2A
D404	23316254	DIODE, ERC06-15
D406	A7978850	DIODE, S5295G
D411	23118275	DIODE, ZENER, RD18MB2
D412	23118707	DIODE, RP-1H
D413	23118707	DIODE, RP-1H
D414	23118094	DIODE, EU2A
D415	23118094	DIODE, EU2A
D420	23115599	DIODE, 1N4148
D421	23118094	DIODE, EU2A
D425	23118094	DIODE, EU2A
D426	23118275	DIODE, ZENER, RD18MB2
D461	23224366	DIODE, FMQ-3GU
D475	23115774	DIODE, ZENER, RD6.2E(FA-1)
D502	23118041	DIODE, MA111
D505	23115599	DIODE, 1N4148
D506	23316673	DIODE, ZENER, MTZJ5.6C
D511	23357037	DIODE, ZENER, UDZS5.6B

Location No.	Parts No.	Description
D514	23357037	DIODE, ZENER, UDZS5.6B
D515	23357037	DIODE, ZENER, UDZS5.6B
D520	23316647	DIODE, ZENER, MTZJ2.0B
D601	23118041	DIODE, MA111
D602	23118041	DIODE, MA111
D603	23118041	DIODE, MA111
D604	23118041	DIODE, MA111
D605	23118041	DIODE, MA111
D606	23118041	DIODE, MA111
D607	23118041	DIODE, MA111
D608	23118041	DIODE, MA111
D609	23118041	DIODE, MA111
D610	23118041	DIODE, MA111
D611	23118041	DIODE, MA111
D612	23118041	DIODE, MA111
D613	23118041	DIODE, MA111
D614	23118041	DIODE, MA111
D615	23118041	DIODE, MA111
D616	23118041	DIODE, MA111
D617	23118041	DIODE, MA111
D618	23118041	DIODE, MA111
D619	23118041	DIODE, MA111
D620	23118041	DIODE, MA111
D621	23118041	DIODE, MA111
D622	23118041	DIODE, MA111
D623	23118041	DIODE, MA111
D624	23118041	DIODE, MA111
D625	23118041	DIODE, MA111
D626	23118041	DIODE, MA111
D627	23118041	DIODE, MA111
D628	23118269	DIODE, ZENER, RD22MB2
D704	23115599	DIODE, 1N4148
D704	23118041	DIODE, MA111
D705	23115599	DIODE, 1N4148
D705	23118041	DIODE, MA111
D714	23118041	DIODE, MA111
D715	23115599	DIODE, 1N4148
D715	23118041	DIODE, MA111
D721	23115599	DIODE, 1N4148
D724	23118041	DIODE, MA111
D725	23118041	DIODE, MA111
D734	23118041	DIODE, MA111
D735	23118041	DIODE, MA111
D744	23118041	DIODE, MA111
D745	23118041	DIODE, MA111
D754	23118041	DIODE, MA111
D755	23118041	DIODE, MA111
D760	23118041	DIODE, MA111
D761	23115599	DIODE, 1N4148
D761	23118350	DIODE, ZENER, RD4.7M-T1BB1
D762	23115599	DIODE, 1N4148
D762	23357168	DIODE, ZENER, UDZS6.2B
D763	23115599	DIODE, 1N4148
D763	23118041	DIODE, MA111
D764	23115599	DIODE, 1N4148
D764	23115599	DIODE, 1N4148
D781	23115599	DIODE, 1N4148
D782	23115599	DIODE, 1N4148
D783	23115599	DIODE, 1N4148
D784	23115599	DIODE, 1N4148
D798	23115599	DIODE, 1N4148
D799	23115599	DIODE, 1N4148
D801	23357041	DIODE, LN6SB60-F05
D801B	72471082	SCREW, 3X10MM
D815	23316753	DIODE, ZENER, MTZJ33A

Location No.	Parts No.	Description
D816	23115599	DIODE, 1N4148
D817	23115599	DIODE, 1N4148
D818	23115599	DIODE, 1N4148
D819	23316653	DIODE, ZENER, MTZJ2.7B
D820	23316184	DIODE, FML-G12S
D820B	70391355	SCREW, 3X8MM
D821	23316390	DIODE, D3SB60(4101)
D822	23316381	DIODE, RU1P
D824	23118479	DIODE, BYD33J
D825	23115599	DIODE, 1N4148
D826	23115599	DIODE, 1N4148
D827	23115599	DIODE, 1N4148
D828	23316749	DIODE, ZENER, MTZJ30A
D829	A7270200	DIODE, 1Z6.2
D830	A7978850	DIODE, S5295G
D832	23115532	DIODE, ERB12-01
D841	23115599	DIODE, 1N4148
D845	23115599	DIODE, 1N4148
D848	23316689	DIODE, ZENER, MTZJ10A
D850	23357215	DIODE, D4SBS6
D850B	70391355	SCREW, 3X8MM
D851	23316399	DIODE, EL1Z
D852	23316399	DIODE, EL1Z
D853	23316399	DIODE, EL1Z
D854	23316399	DIODE, EL1Z
D855	23316399	DIODE, EL1Z
D862	23118057	DIODE, AG01A
D864	23118060	DIODE, AL01Z
D873	23316747	DIODE, ZENER, MTZJ27C
D875	23316688	DIODE, ZENER, MTZJ9.1C
D876	23316759	DIODE, ZENER, MTZ J 36C
D877	23316747	DIODE, ZENER, MTZJ27C
D878	23316686	DIODE, ZENER, MTZJ9.1A
D881	23115599	DIODE, 1N4148
D884	23357217	DIODE, D4SBL40
D884B	70391355	SCREW, 3X8MM
D885	23357216	DIODE, D4SBL20U
D891	23357214	DIODE, D4SBS4
D892	23316768	DIODE, FMB-26L
D892B	70391355	SCREW, 3X8MM
D893	23115599	DIODE, 1N4148
D894	23115599	DIODE, 1N4148
D901	23115599	DIODE, 1N4148
D902	23115599	DIODE, 1N4148
D911	23115599	DIODE, 1N4148
D912	23115599	DIODE, 1N4148
D921	23115599	DIODE, 1N4148
D922	23115599	DIODE, 1N4148
D924	23115599	DIODE, 1N4148
D925	23115599	DIODE, 1N4148
D931	23115599	DIODE, 1N4148
D932	23115599	DIODE, 1N4148
D933	23115599	DIODE, 1N4148
D934	23115599	DIODE, 1N4148
D936	A7568250	DIODE, 1S1834
D941	23115599	DIODE, 1N4148
D942	23115599	DIODE, 1N4148
D943	23115599	DIODE, 1N4148
D945	A7568250	DIODE, 1S1834
D946	23115599	DIODE, 1N4148
D963	23115599	DIODE, 1N4148
D964	23115599	DIODE, 1N4148
D965	23115599	DIODE, 1N4148
D966	23115599	DIODE, 1N4148
D967	A7568250	DIODE, 1S1834

Location No.	Parts No.	Description
D3402	23118041	DIODE, MA111
D4451	23115532	DIODE, ERB12-01
D4452	23357170	DIODE, ZENER, UDZS8.2B
D4453	23118041	DIODE, MA111
D4460	23118041	DIODE, MA111
D7703	23118041	DIODE, MA111
D7705	23118041	DIODE, MA111
D7706	23118041	DIODE, MA111
D7707	23118041	DIODE, MA111
D7708	23118041	DIODE, MA111
D7710	23115599	DIODE, 1N4148
D7711	23316675	DIODE, ZENER, MTZJ6.2B
D7725	23118041	DIODE, MA111
D7732	23316766	DIODE, RU2YX
D7733	23118275	DIODE, ZENER, RD18MB2
D7734	23118275	DIODE, ZENER, RD18MB2
D7735	23316766	DIODE, RU2YX
D7736	23118041	DIODE, MA111
DA02	23118041	DIODE, MA111
DA03	23118041	DIODE, MA111
DA42	23316673	DIODE, ZENER, MTZJ5.6C
DA89	23118041	DIODE, MA111
DB01	23358564	LED, LAMP RED SLR-56VC3FPQ
DB02	23358563	LED, LAMP GREEN SLR-56MC3FPQR
DB03	23358563	LED, LAMP GREEN SLR-56MC3FPQR
DB04	23358562	LED, LAMP ORANGE SLR-56DC3FPQ
DD81	23118310	DIODE, ZENER, RD5.6MB2
DF01	23115599	DIODE, 1N4148
DG02	23316711	DIODE, S1WBA60
DG03	23118479	DIODE, BYD33J
DG10	23118479	DIODE, BYD33J
DG11	23316746	DIODE, ZENER, MTZJ27B
DG12	23316672	DIODE, ZENER, MTZJ5.6B
DG13	23316746	DIODE, ZENER, MTZJ27B
DG21	23118057	DIODE, AG01A
DG25	23118052	DIODE, RU4Z LF-L1
DG27	23316673	DIODE, ZENER, MTZJ5.6C
DH001	23316675	DIODE, ZENER, MTZJ6.2B
DH002	23316675	DIODE, ZENER, MTZJ6.2B
DH003	23316675	DIODE, ZENER, MTZJ6.2B
DR01	23118041	DIODE, MA111
DR02	23118041	DIODE, MA111
DR03	23118041	DIODE, MA111
DR12	23357172	DIODE, ZENER, UDZS10B
DR13	23357172	DIODE, ZENER, UDZS10B
DR14	23357172	DIODE, ZENER, UDZS10B
DR61	23118041	DIODE, MA111
DR62	23118041	DIODE, MA111
DR63	23118041	DIODE, MA111
DR70	23357037	DIODE, ZENER, UDZS5.6B
DS11	23118041	DIODE, MA111
DV14	23357168	DIODE, ZENER, UDZS6.2B
MISCELLANEOUS		
B224	23035412	SCREW, BTB4X12SZN
B230	23037312	SCREW, BTBW3X12SZN
B232	23035412	SCREW, BTB4X12SZN
B235	23037312	SCREW, BTBW3X12SZN
B240	23035412	SCREW, BTB4X12SZN
B241	23035412	SCREW, BTB4X12SZN
B255	23037312	SCREW, BTBW3X12SZN
B341	23845834	LEAD CLAMPER
B347	23845834	LEAD CLAMPER
BB20A	23903022	CONNECTOR, BASE B-B 8P 2.5 JST
BB20B	23903022	CONNECTOR, BASE B-B 8P 2.5 JST

Location No.	Parts No.	Description
BB20C	23368627	CONNECTOR, BRIDGE B-B 8P 2.5JST 08TM-2.5FJ-E
BB21A	23713013	BASE SOCKET 16P 1.5
BB21B	23713014	CONNECTOR, BRIDGE PLUG 16P 1.5
BB23A	23902749	CONNECTOR, 6P
BB23B	23368517	CONNECTOR, 6P
BB24A	23713013	BASE SOCKET 16P 1.5
BB24B	23713014	CONNECTOR, BRIDGE PLUG 16P 1.5
BB80A	23713013	BASE SOCKET 16P 1.5
BB80B	23713014	CONNECTOR, BRIDGE PLUG 16P 1.5
BB82A	23713013	BASE SOCKET 16P 1.5
BB82B	23713014	CONNECTOR, BRIDGE PLUG 16P 1.5
BB85A	23903022	CONNECTOR, BASE B-B 8P 2.5 JST
BB85B	23903022	CONNECTOR, BASE B-B 8P 2.5 JST
BB85C	23368627	CONNECTOR, BRIDGE B-B 8P 2.5JST 08TM-2.5FJ-E
BB86A	23368517	CONNECTOR, 6P
BB86B	23902749	CONNECTOR, 6P
E921	23964147	COOLANT, COOLANT
E951	23964147	COOLANT, COOLANT
E981	23964147	COOLANT, COOLANT
⚠ F801	23144507	FUSE, CARTRIDGE 5.2X20 250V 3.15A
F801A	23165433	FUSE HOLDER, 5.2 SOC
F801B	23165433	FUSE HOLDER, 5.2 SOC
G103	23103828	INDUCTOR, BEAD, TEM2121M
G601	24000445	CHIP JUMPER, 1608TYPE
G602	24000445	CHIP JUMPER, 1608TYPE
G603	24000445	CHIP JUMPER, 1608TYPE
G604	24000445	CHIP JUMPER, 1608TYPE
GA82	24092538	CERAMIC CHIP, 10V F 1UF Z
GC01	24000445	CHIP JUMPER, 1608TYPE
GC02	24000445	CHIP JUMPER, 1608TYPE
GC03	24000445	CHIP JUMPER, 1608TYPE
GC04	24000445	CHIP JUMPER, 1608TYPE
GC80	24000824	JUMPER CHIP, 2125TYPE
GC81	24000824	JUMPER CHIP, 2125TYPE
GC82	24000824	JUMPER CHIP, 2125TYPE
GC83	24000824	JUMPER CHIP, 2125TYPE
GC84	24000824	JUMPER CHIP, 2125TYPE
GC85	24000824	JUMPER CHIP, 2125TYPE
GD08	24000445	CHIP JUMPER, 1608TYPE
GJ02	24000445	CHIP JUMPER, 1608TYPE
GJ03	24000445	CHIP JUMPER, 1608TYPE
GJ03	24000824	JUMPER CHIP, 2125TYPE
GJ04	24000445	CHIP JUMPER, 1608TYPE
GJ05	24000824	JUMPER CHIP, 2125TYPE
GJ06	24000445	CHIP JUMPER, 1608TYPE
GJ06	24000445	CHIP JUMPER, 1608TYPE
GJ07	24000824	JUMPER CHIP, 2125TYPE
GJ08	24000824	JUMPER CHIP, 2125TYPE
GJ09	24000445	CHIP JUMPER, 1608TYPE
GJ09	24000824	JUMPER CHIP, 2125TYPE
GJ14	24000445	CHIP JUMPER, 1608TYPE
GJ30	24000445	CHIP JUMPER, 1608TYPE
GJ31	24000445	CHIP JUMPER, 1608TYPE
GJ33	24000445	CHIP JUMPER, 1608TYPE
GJ44	24000445	CHIP JUMPER, 1608TYPE
GJ48	24000445	CHIP JUMPER, 1608TYPE
GJ49	24000445	CHIP JUMPER, 1608TYPE
GJ50	24000445	CHIP JUMPER, 1608TYPE
GJ51	24000445	CHIP JUMPER, 1608TYPE
GJ59	24000445	CHIP JUMPER, 1608TYPE
GJ60	24000445	CHIP JUMPER, 1608TYPE
GJ62	24000445	CHIP JUMPER, 1608TYPE
GJ63	24000445	CHIP JUMPER, 1608TYPE

Location No.	Parts No.	Description
GJ768	24000445	CHIP JUMPER, 1608TYPE
GJ769	24000445	CHIP JUMPER, 1608TYPE
GJ770	24000445	CHIP JUMPER, 1608TYPE
GJ771	24000445	CHIP JUMPER, 1608TYPE
GJ775	24000445	CHIP JUMPER, 1608TYPE
GJ776	24000445	CHIP JUMPER, 1608TYPE
GJ777	24000445	CHIP JUMPER, 1608TYPE
GJ778	24000445	CHIP JUMPER, 1608TYPE
GL01	23103859	COIL, CHOKE, TEM2011
GL02	23103859	COIL, CHOKE, TEM2011
GR15	24011332	METAL FILM CHIP 1/20W 3.3K J
GV03	24011101	CHIP, METAL FILM, 1/20W 100 OHM J
GV04	24011101	CHIP, METAL FILM, 1/20W 100 OHM J
GV05	24011101	CHIP, METAL FILM, 1/20W 100 OHM J
GV06	24011101	CHIP, METAL FILM, 1/20W 100 OHM J
GV35	24011101	CHIP, METAL FILM, 1/20W 100 OHM J
GV42	24011101	CHIP, METAL FILM, 1/20W 100 OHM J
H002	23148732	MODULE, NICAM/IGR A-PRO AC3 MPSA11A
H002A	23960136	SILICONE, TSE3843-W, ADHESIVE
JR01	24000445	CHIP JUMPER, 1608TYPE
KB01	23000852	IC, REMOCON RECEIVER, PIC-37043TE2
MD02A	23103839	CORE, FERRITE, TFE1012
P004	23161702	PUSH TERMINAL, 8P PUSH TERM. 8P
P661	23365444	JACK, EARPHONE, D3.5 HOSIDEN
P708	23902655	CONNECTOR, 15P
P709	23902655	CONNECTOR, 15P
P713	23164787	PLUG, 7P
P714	23164787	PLUG, 7P
P715	23164787	PLUG, 7P
P800	23368013	CONNECTOR, PLUG, 2P 11.88MM W VT-JST
⚠ P801	23372012	POWER CORD, POWER CORD
⚠ P801	23372052	POWER CORD, 250V2.5A
PD04	23364092	PIN JACK, SW ORANGE PIN JACK
PD05	A5812240	HIC OPTIC RECEIVER 6P TORX176
PF01	23902655	CONNECTOR, 15P
PF01A	23367724	CONNECTOR, B-B, 15P
PH02	23365598	21 PIN CONNECTOR 2100RFT 21 PIN C0NNECT0R
PH001	23367724	CONNECTOR, B-B, 15P
PH002	23367724	CONNECTOR, B-B, 15P
PX01A	23902655	CONNECTOR, 15P
PX01B	23367724	CONNECTOR, B-B, 15P
PX02A	23902781	CONNECTOR, SOCKET, B-B 12P 2.5MM JST
PX02B	23368531	CON PLUG B-B 12P2.5MM JST, CONNECTOR12P
S601	23344367	SWITCH, SLIDE
⚠ S801	23145434	SWITCH, 2C2P, POWER
SA01	23145226	SWITCH, 1C1P, PUSH
SA02	23145226	SWITCH, 1C1P, PUSH
SA03	23145226	SWITCH, 1C1P, PUSH
SA04	23145226	SWITCH, 1C1P, PUSH
SA06	23145226	SWITCH, 1C1P, PUSH
SA07	23145226	SWITCH, 1C1P, PUSH
SA08	23145226	SWITCH, 1C1P, PUSH
⚠ SR81	23146574	RELAY, DLS5D1-O(M) 0.15W
⚠ V901A	23903148	SOCKET, ISH-44S-E ICE #5
⚠ V902A	23903148	SOCKET, ISH-44S-E ICE #5
⚠ V903A	23903148	SOCKET, ISH-44S-E ICE #5
W661	23351131	SPEAKER, SPK-1390, 120X120, 8 OHM, 15W (42WH18P)
W661	23151232	SPEAKER, SPK-1235 (50WH18P)
W662	23351131	SPEAKER, SPK-1390, 120X120, 8 OHM, 15W (42WH18P)
W662	23151232	SPEAKER, SPK-1235 (50WH18P)

Location No.	Parts No.	Description
X501	23153438	CRYSTAL, 16.200 25PPM 25OHM
X4402	23153721	CERAMIC RESONATOR, 503KHZ
XA03	23153394	CRYSTAL, 16.000000MHZ AT-51
XF01	23153552	CRYSTAL RESONATOR, 6MHZ 50PPM CRYSTAL
⚠ Z410	23110842	FOCUS PACK, TPA6031
Z410A	23505177	CABLE, FOCUS
⚠ Z450	24083013	COMPOSITE PARTS, CR-BLOCK TPA5010AH
Z801	23148734	MODULE, PROTECTOR, HIC1026A
Z821	23144605	PROTECTOR, PRT SERIES, DC60V/AC90V 2000MA
Z822	23144609	PROTECTOR, PRT SERIES, DC60V/AC90V 5000MA
⚠ Z850	23144608	PROTECTOR, PRT SERIES, DC60V/AC90V 4000MA
⚠ Z851	23144608	PROTECTOR, PRT SERIES, DC60V/AC90V 4000MA
⚠ Z852	23144605	PROTECTOR, PRT SERIES, DC60V/AC90V 2000MA
⚠ Z853	23144604	PROTECTOR, PRT SERIES DC60V/AC90V 1
⚠ Z854	23144604	PROTECTOR, PRT SERIES DC60V/AC90V 1
⚠ Z860	23144542	PROTECTOR, 491SERIES 125V 4A
⚠ Z885	23144605	PROTECTOR, PRT SERIES, DC60V/AC90V 2000MA
⚠ Z889	23144608	PROTECTOR, PRT SERIES, DC60V/AC90V 4000MA
⚠ Z890	23144607	PROTECTOR, PRT SERIES, DC60V/AC90V 3150MA
⚠ Z891	23144609	PROTECTOR, PRT SERIES, DC60V/AC90V 5000MA
ZC01A	23103839	CORE, FERRITE, TFE1012
ZG01	23144450	PROTECTOR, PRF2000, 125V, 2.0A
ZH001	23103823	COIL, FILTER, TEM2027D
ZH002	23103823	COIL, FILTER, TEM2027D
ZH121	23103823	COIL, FILTER, TEM2027D
ZH122	23103823	COIL, FILTER, TEM2027D
ZH141	23103823	COIL, FILTER, TEM2027D
ZH142	23103823	COIL, FILTER, TEM2027D
ZH161	23103823	COIL, FILTER, TEM2027D
ZH162	23103823	COIL, FILTER, TEM2027D
ZX101	23103852	COIL, FILTER, TEM2028AH
ZX201	23103823	COIL, FILTER, TEM2027D
ZX202	23103823	COIL, FILTER, TEM2027D
ZX321	23103823	COIL, FILTER, TEM2027D
ZX341	23103823	COIL, FILTER, TEM2027D
ZX361	23103823	COIL, FILTER, TEM2027D
ZX401	23303181	EMI FILTER, TEM1012N
ZX402	23303181	EMI FILTER, TEM1012N
PC BOARD ASSEMBLIES		
* U101	23786797	SIGNAL BOARD, PD0128D
* U102	23786828	DEF-CONVER BOARD, PD0129D (42WH18P)
* U102	23787057	DEF-CONVER BOARD, PD0129F (50WH18P)
* U103	23786628	D-CONVER BOARD, PB9486G (42WH18P)
* U103	23786967	D-CONVER BOARD, PB9486H (50WH18P)
* U104	23786472	EPG-M2 BOARD, PD0216
* U105	23785888	DFS BOARD, PB9954
* U106	23786440	EXT-SP BOARD, PD0206A
* U901A	23786629	CRTD RED BOARD, PD0131B1
* U901B	23786630	CRTD GREEN BOARD, PD0131B2
* U901C	23786631	CRTD BLUE BOARD, PD0131B3
* U901D	23786632	SVM GREEN BOARD, PD0131B4
* U901E	23786633	SVM RED BOARD, PD0131B5
* U901F	23786634	SVM BLUE BOARD, PD0131B6
* U902	23786514	MAIN-POWER BOARD, PD0132B

Location No.	Parts No.	Description
* U903A	23786829	FRONT IN BOARD, PD0208B1
* U903B	23786830	RMT IN BOARD, PD0208B2
* U903C	23786831	KEY-IND BOARD, PD0208B3
* U904	23786439	EPG-POWER BOARD, PD0205A
* U905	23786437	AC3-POWER BOARD, PD0203A
PICTURE TUBE		
⚠ V911R	23908037	SERVICE ONLY PARTS, PJTV CRT-R 43PH14P
⚠ V912B	23908038	SERVICE ONLY PARTS, PJTV CRT-B (43WH18P)
⚠ V912B	23588697	PJTV CRT-B (50WH18P)
⚠ V913G	23908039	SERVICE ONLY PARTS, PJTV CRT-G (43WH18P)
⚠ V913G	23588698	PJTV CRT-G (50WH18P)
TUNER		
H001	23321398	TUNER, EURO IF ALPS TADF4-003A
ACCESSORIES		
K902	23306434	REMOCON HAND UNIT IR, CTVPAL CT-90100
Y101A	23565350	OWNER'S MANUAL, ENGLISH, 43WH18P/50WH18P
Y101B	23565351	OWNER'S MANUAL, FRENCH, 43WH18P/50WH18P
Y101C	23565352	OWNER'S MANUAL, GERMAN, 43WH18P/50WH18P
Y101D	23565353	OWNER'S MANUAL, ITALIAN, 43WH18P/50WH18P
Y101E	23565354	OWNER'S MANUAL, SPANISH, 43WH18P/50WH18P
Y101F	23565355	OWNER'S MANUAL, DANISH, 43WH18P/50WH18P
Y101G	23565356	OWNER'S MANUAL, SWEDISH, 43WH18P/50WH18P
Y101H	23565357	OWNER'S MANUAL, FINNISH, 43WH18P/50WH18P
Y101J	23565359	OWNER'S MANUAL, DUTCH, 43WH18P/50WH18P
Y101K	23565360	OWNER'S MANUAL, PORTUGUESE, 43WH18P/50WH18P
Y101L	23565361	OWNER'S MANUAL, POLISH, 43WH18P/50WH18P
Y101M	23565362	OWNER'S MANUAL, TURKISH, 43WH18P/50WH18P
Y101N	23565358	OWNER'S MANUAL, NORWEGIAN, 43WH18P/50WH18P
CABINET PARTS		
A001	23008798	OTHER BLOCK, WOOD CABINET 42WH18P
A101	23411642	WOOD CABINET (50WH18P)
A125	23560038	LABEL, ATTENTION SERVICE 48PJ6DB
A160	23437802	CASTOR ASSY (50WH18P)
A201	23540760	COVER, BEZEL (42WH18P)
A201	23540885	COVER, BEZEL (50WH18P)
A202	23450418	PANEL, CONTROL PANEL 42WH18P
A213	23428014	DOOR, DOOR 42WH18P
A214	70368125	PUSH CATCH
A223	23929540	PIECE, BUTTON POWER 42WT19B
A225	23445538	BUTTON, CONTROL KEY 42WT19B
A258	23527191	GRILLE, SPEAKER GRILLE 42WT19B
A420	23540761	COVER, MIRROR COVER 42WT19B
⚠ A424	23411597	CABINET, BENTED BACK BOARD 42WT19B
A505	72471068	SCREW, 4X12

Location No.	Parts No.	Description
A508	23035412	SCREW, BTB4X12SZN
A529	23037312	SCREW, BTBW3X12SZN
A529	23037312	SCREW, BTBW3X12SZN
A547	23035010	SCREW, PBI 4X16
A701	23064584	CARTON, CASE (42WH18P)
A701	23064642	CARTON, CASE (50WH18P)
A702	23946233	PACKING, TOP PACKING (42WH18P)
A702	23946270	PACKING, TOP PACKING (50WH18P)
A703	23946234	PACKING, TOP PACKING 42WT19B
A726	23974753	POLYPROPYLENE BAND, 3327DB
A727	23974753	POLYPROPYLENE BAND, 3327DB
A731	23560820	LABEL,IN HOUSE CARTON(57YEL), 28MW7DB
K101	23430690	LENS, SSM65AB43 (42WH18P)
K101	23405006	DELTA250A/B (50WH18P)
K102	23430690	LENS, SSM65AB43 (42WH18P)
K102	23405006	DELTA250A/B (50WH18P)
K103	23430690	LENS, SSM65AB43 (42WH18P)
K103	23405006	DELTA250A/B (50WH18P)
K501	23311897	SCREEN, 42KL LENTICULAR SHEET SCREEN42KL-L (42WH18P)
K501	23311890	SCREEN50KLHL (50WH18P)
K502	23311921	SCREEN, 42KLU FRESNEL SHEET SCREEN42KLUF (42WH18P)
K502	23311854	SCREEN50KL-F (50WH18P)
K601	23405045	MIRROR, MIRROR 42W FIRST T3 (42WH18P)
K601	23405061	MIRROR (50WH18P)

Location No.	Parts No.	Description

SPECIFIC INFORMATIONS

TERMINAL VIEW OF TRANSISTORS

① 2SD2253
(old)
2SC5243

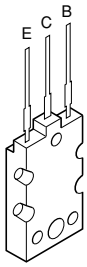

② 2SC3852
2SD1763A
2SC1569
2SC4544
2SA1788
2SA1306
2SA1186A

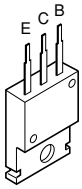

③ 2SC752GTM
2SC2482
2SC2655
2SC4721P

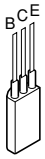

④ 2SC752
2SA562TM
2SA1015
2SC1815
2SC2878
2SC1740S
2SC2120
2SA9335

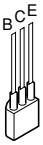

⑤ 2SA1788

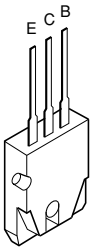

⑥ RN2203
RN2201
RN2004
RN1203
RN1204
RN2204
RN1205
RN1202
RN1201

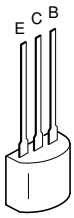

⑦ 2SD1554
2SD2253
2SD1556
2SC5143
2SD2553

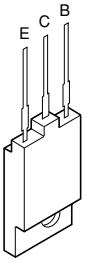

⑧ ON4409

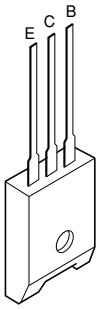

SPECIFIC INFORMATIONS

MEMO

MEMO

MEMO

SCHEMATIC DIAGRAM

MODEL : 42WH18P / 50WH18P

WARNING: BEFORE SERVICING THIS CHASSIS, READ THE "X-RAY RADIATION PRECAUTION", "SAFETY PRECAUTION" AND "PRODUCT SAFETY NOTICE" ON THE MANUAL FOR THIS MODEL.

CAUTION: The international hazard symbols "⚠" in the schematic diagram and the parts list designate components which have special characteristics important for safety and should be replaced only with types identical to those in the original circuit or specified in the parts list. The mounting position of replacements is to be identical with originals. Before replacing any of these components, read carefully the PRODUCT SAFETY NOTICE on the MANUAL for this model. Do not degrade the safety of the receiver through improper servicing.

NOTE:

1. RESISTOR — Resistance is shown in ohm [K = 1.000, M = 1.000.000]. All resistors are 1/6W and 5% tolerance carbon resistor, unless otherwise noted as the following marks.
   1/2R = Metal or Metal oxide of 1/2 watt — 1/2S = Carbon compsistion of 1/2 watt
   1RF = Fuse resistor of 1 watt — 10W = Cement of 10 watt
   K = ±10% G = ±2% F = ±1%
2. CAPACITOR — Unless otherwise noted in schematic, all capacitor values less than 1 are expressed in μF, and the values more than 1 in pF.
   All capacitors are ceramic 50V, unless otherwise noted as the following marks.
   Electolytic capacitor — Mylar capacitor
3. The parts indicated with " ⚠ " have special characteristics, and should be replaced with identical parts only.
4. Voltages read with DIGITAL MULTI-METER from point indicated to chassing ground, using a color bar signal with all controls at normal, line voltage 220 volts.
5. Waveforms are taken receiving color bar signal with enough sensitivity.
6. Voltage reading shown are nominal values and may vary ±20% except H.V.

■ SCHEMATIC DIAGRAM STRUCTURE:

- SIGNAL Circuit
- MAIN POWER Circuit
- DEF / CONVER Circuit
  - (1/2) Circuit
  - (2/2) Circuit
- CRT-D SVM
  - (1/2) Circuit
  - (2/2) Circuit
- D-CONVER Circuit
- EPG-M2 Circuit
- FRONT-IN / RMT / KEY Circuit
- AC-3 POWER Circuit
- EPG POWER Circuit
- EXT-SP Circuit
- DFS Ver4.01 Dual SDRAM Circuit

SPECIFICATIONS (Representative: 42WH18P)

Rated voltage		AC 220 V – 240 V, 50/60 Hz				
Dimensions (Width × Height × Depth)		1004 mm × 1161 mm × 415 mm				
Mass		48.0 kg				
Screen size		Type 42				
Television system (Aerial input)	Channel coverage	**System**	**Channel**	**VHF**	**UHF**	**CATV**
		PAL B/G	CCIR	2 – 12	21 – 69	X ~ Z+2, S1 ~ S41
		PAL I	UK	—	21 – 69	—
		SECAM L	CCIR	*	21 – 69	* VHF : B-C ; 1-6, B-Q, 71-86
		SECAM D/K	OIRT	1 – 12	21 – 69	X1 ~ X19
	Special RF signal	**Colour system**	**Sound system**			
		4.43NTSC	5.5/6.0/6.5 MHz			
		PAL 60Hz	5.5/6.0/6.5 MHz			
Colour system		PAL/SECAM/4.43NTSC/3.58NTSC				
Sound output		14 W + 14 W (Main), 20 W (Center), 10 W + 10 W (Rear)				
Accessories		• Remote control unit × 1 • Battery (R03, AAA) × 2				

* Please refer to owner's manual in detail.

TOSHIBA CORPORATION
1-1, SHIBAURA 1-CHOME, MINATO-KU, TOKYO 105-8001, JAPAN

SCHEMATIC DIAGRAM

MODEL : 42WH18P / 50WH18P

WARNING: BEFORE SERVICING THIS CHASSIS, READ THE "X-RAY RADIATION PRECAUTION", "SAFETY PRECAUTION" AND "PRODUCT SAFETY NOTICE" ON THE MANUAL FOR THIS MODEL.

CAUTION: The international hazard symbols "⚠" in the schematic diagram and the parts list designate components which have special characteristics important for safety and should be replaced only with types identical to those in the original circuit or specified in the parts list. The mounting position of replacements is to be identical with originals. Before replacing any of these components, read carefully the PRODUCT SAFETY NOTICE on the MANUAL for this model. Do not degrade the safety of the receiver through improper servicing.

NOTE:

1. RESISTOR — Resistance is shown in ohm [K = 1.000, M = 1.000.000]. All resistors are 1/6W and 5% tolerance carbon resistor, unless otherwise noted as the following marks.
   1/2R = Metal or Metal oxide of 1/2 watt — 1/2S = Carbon compsistion of 1/2 watt
   1RF = Fuse resistor of 1 watt — 10W = Cement of 10 watt
   K = ±10% G = ±2% F = ±1%
2. CAPACITOR — Unless otherwise noted in schematic, all capacitor values less than 1 are expressed in μF, and the values more than 1 in pF.
   All capacitors are ceramic 50V, unless otherwise noted as the following marks.
   Electolytic capacitor — Mylar capacitor
3. The parts indicated with " ⚠ " have special characteristics, and should be replaced with identical parts only.
4. Voltages read with DIGITAL MULTI-METER from point indicated to chassing ground, using a color bar signal with all controls at normal, line voltage 220 volts.
5. Waveforms are taken receiving color bar signal with enough sensitivity.
6. Voltage reading shown are nominal values and may vary ±20% except H.V.

■ SCHEMATIC DIAGRAM STRUCTURE:

- SIGNAL Circuit
- MAIN POWER Circuit
- DEF / CONVER Circuit
  - (1/2) Circuit
  - (2/2) Circuit
- CRT-D SVM
  - (1/2) Circuit
  - (2/2) Circuit
- D-CONVER Circuit
- EPG-M2 Circuit
- FRONT-IN / RMT / KEY Circuit
- AC-3 POWER Circuit
- EPG POWER Circuit
- EXT-SP Circuit
- DFS Ver4.01 Dual SDRAM Circuit

SCHEMATIC DIAGRAM MODEL : 42WH18P / 50WH18P

WARNING: BEFORE SERVICING THIS CHASSIS, READ THE "X-RAY RADIATION PRECAUTION", "SAFETY PRECAUTION" AND "PRODUCT SAFETY NOTICE" ON THE MANUAL FOR THIS MODEL.

CAUTION: The international hazard symbols "⚠" in the schematic diagram and the parts list designate components which have special characteristics important for safety and should be replaced only with types identical to those in the original circuit or specified in the parts list. The mounting position of replacements is to be identical with originals. Before replacing any of these components, read carefully the PRODUCT SAFETY NOTICE on the MANUAL for this model. Do not degrade the safety of the receiver through improper servicing.

NOTE:

1. RESISTOR Resistance is shown in ohm [K = 1.000, M = 1.000.000]. All resistors are 1/6W and 5% tolerance carbon resistor, unless otherwise noted as the following marks.
   1/2R = Metal or Metal oxide of 1/2 watt 1/2S = Carbon compsistion of 1/2 watt
   1RF = Fuse resistor of 1 watt 10W = Cement of 10 watt
   K = ±10% G = ±2% F = ±1%
2. CAPACITOR Unless otherwise noted in schematic, all capacitor values less than 1 are expressed in μF, and the values more than 1 in pF.
   All capacitors are ceramic 50V, unless otherwise noted as the following marks.
   —⊣|— Electolytic capacitor —⊖|— Mylar capacitor
3. The parts indicated with " ⚠ " have special characteristics, and should be replaced with identical parts only.
4. Voltages read with DIGITAL MULTI-METER from point indicated to chassing ground, using a color bar signal with all controls at normal, line voltage 220 volts.
5. Waveforms are taken receiving color bar signal with enough sensitivity.
6. Voltage reading shown are nominal values and may vary ±20% except H.V.

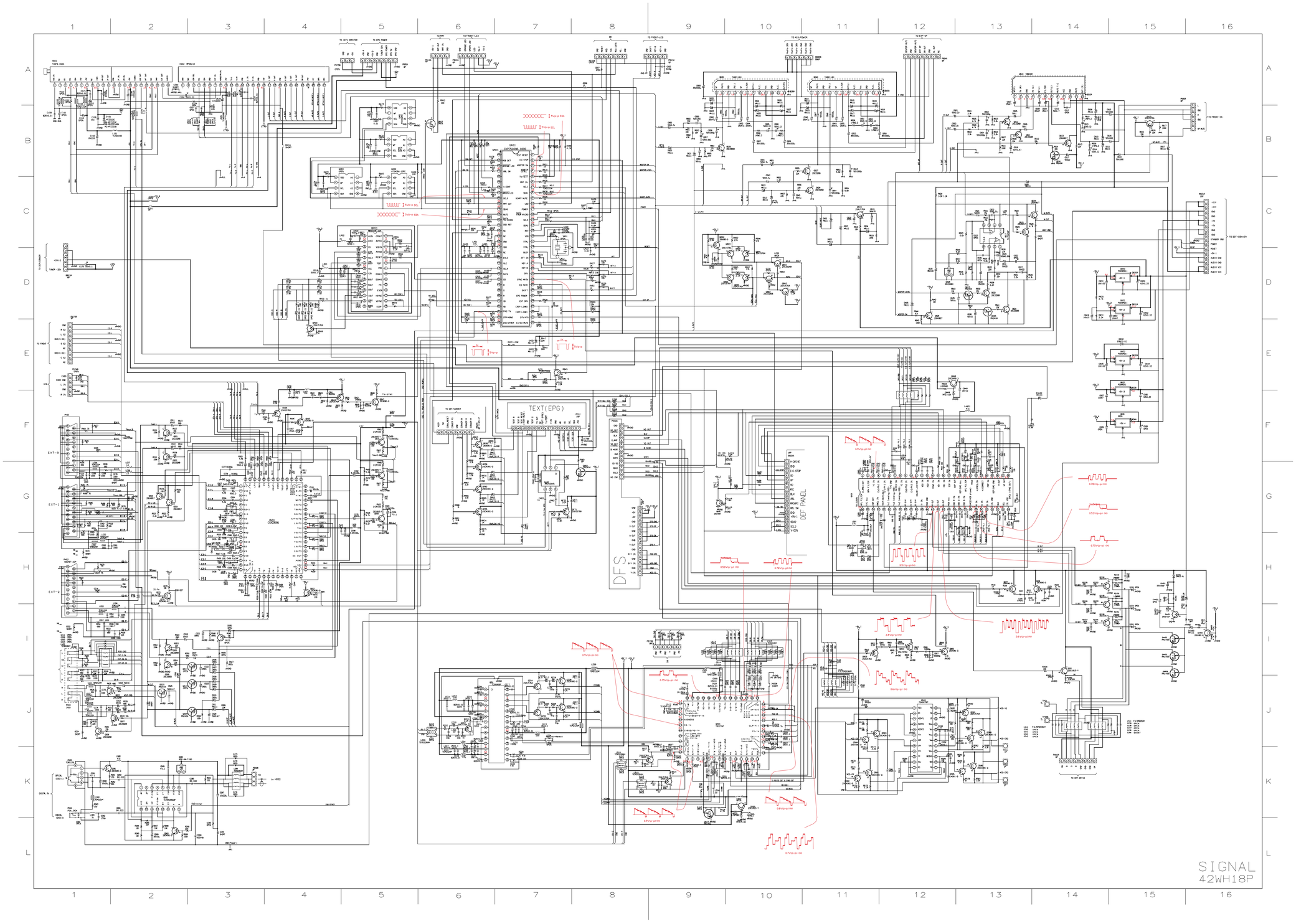

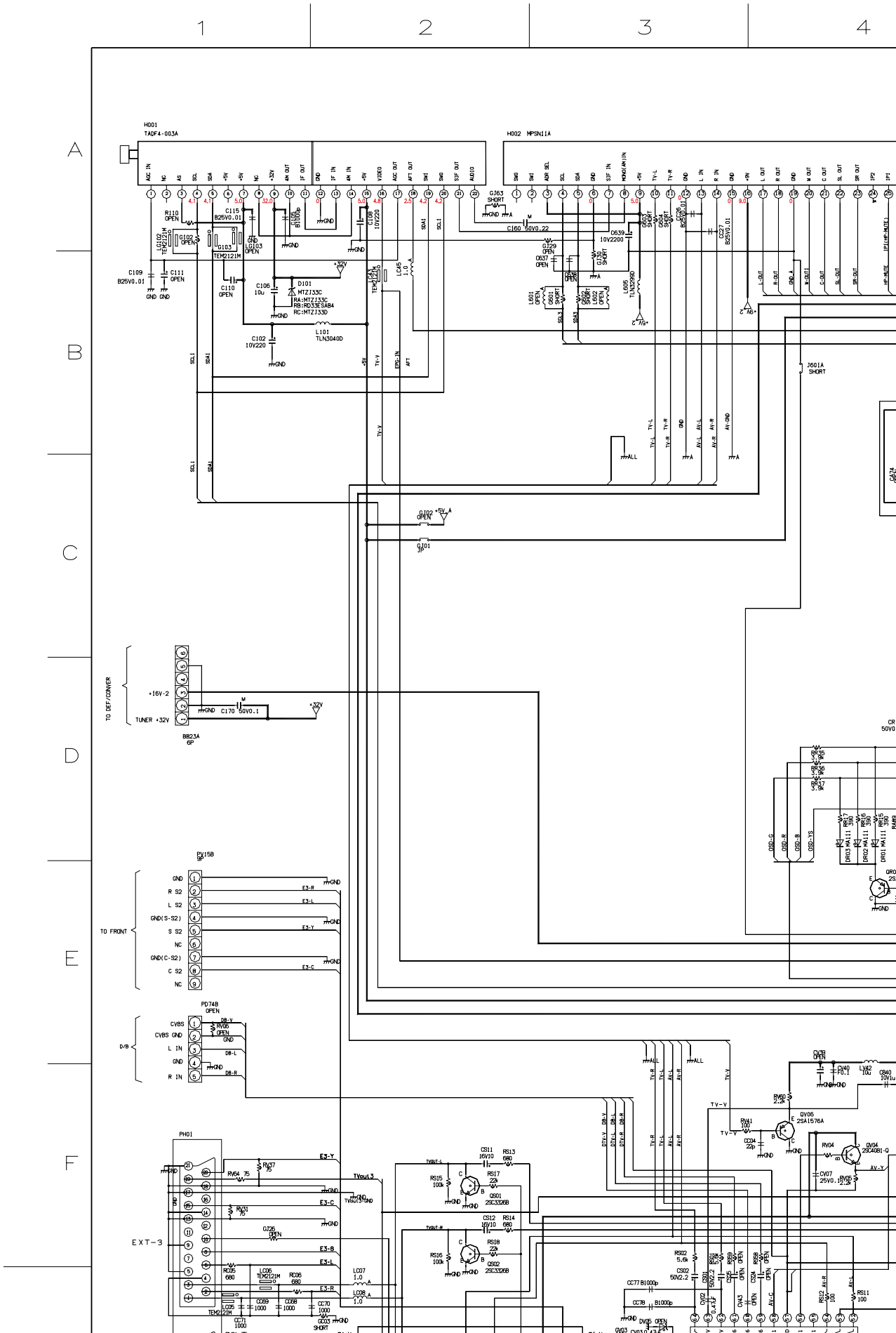

1
2
3
4
A
B
C
D
E
F
H001
TADF4-003A
H002 MPSN11A
J601A
SHORT
TO DEF/CONVER
+16V-2
TUNER +32V
BB23A
6P
PV15B
9P
TO FRONT
PD74B
OPEN
D/B
PH01
EXT-3
QV06
2SA1576A
QV04
2SC4081-Q
QS01
2SC3326B
QS02
2SC3326B

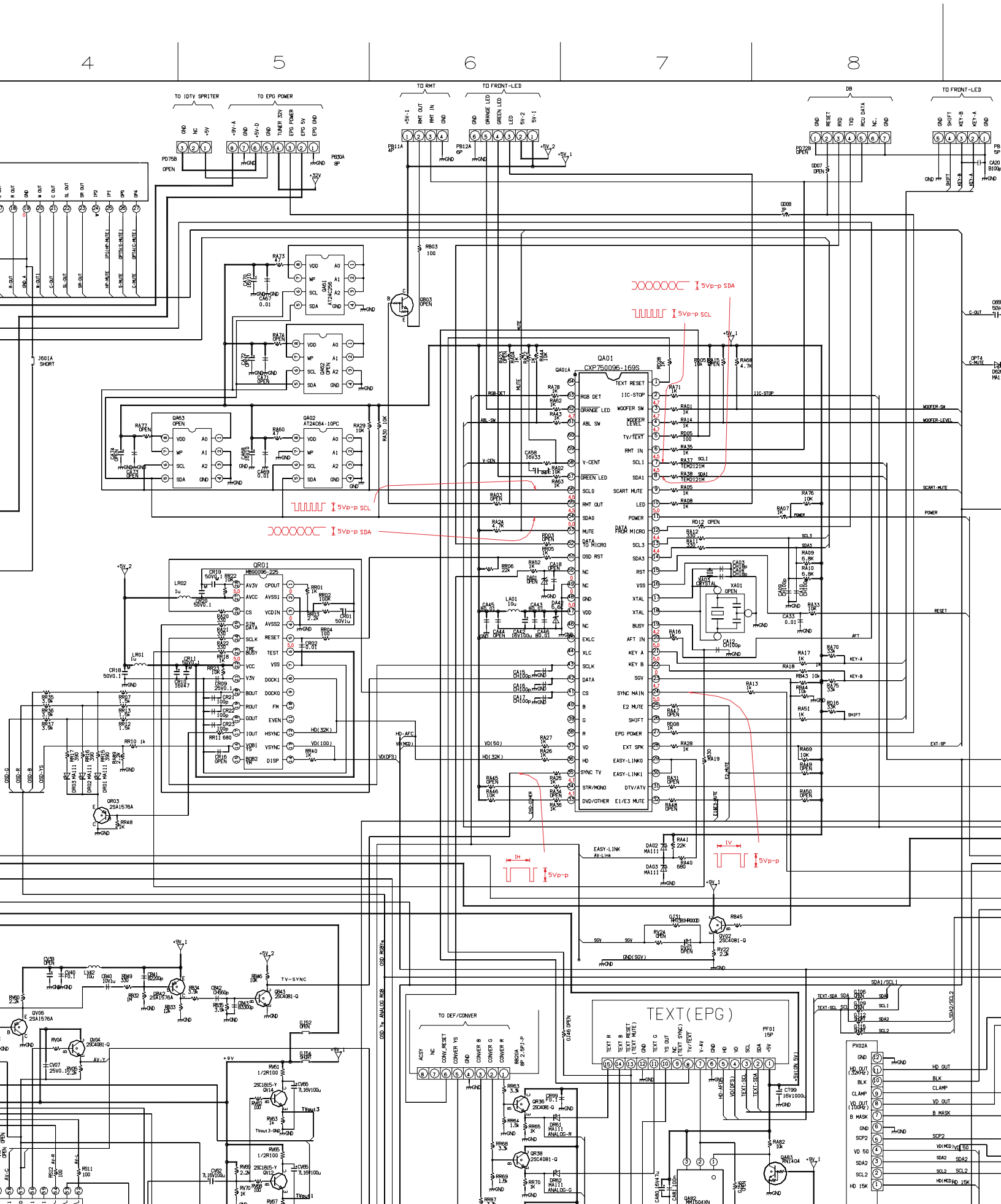
4
5
6
7
8
TO IDTV SPRITER
TO EPG POWER
TO RMT
TO FRONT-LED
DB
TO FRONT-LED
QA01
CXP750096-169S
QR01
HB90096-225
QA63
OPEN
QA02
AT24C64-10PC
QA61
AT24C256
TO DEF/CONVER
TEXT(EPG)
5Vp-p SDA
5Vp-p SCL
5Vp-p
TV-SYNC
AV-Y
TVout3
TVout1
OSD-R
OSD-G
OSD-B
OSD-YS
OSD-RGB
OSD-Ys
ANALOG-RGB
HD-AFC
VD(50)
VD(DFS)
HD(32K)
VD(100)
EASY-LINK
AV-Link
SDA1/SCL1
SDA2/SCL2
HD OUT
BLK
CLAMP
VD OUT
B MASK
SCP2
VD 50
SDA2
SCL2
HD 15K
WOOFER-SW
WOOFER-LEVEL
SCART-MUTE
POWER
RESET
KEY-A
KEY-B
SHIFT
EXT-SP
IIC-STOP
TEXT RESET
RGB DET
ORANGE LED
ABL SW
V-CENT
GREEN LED
SCLO
RMT OUT
SDAO
MUTE
OSD RST
NC
GND
VDD
EXLC
XLC
SCLK
DATA
CS
B
G
R
VD
HD
SYNC TV
STR/MONO
DVD/OTHER
TV/TEXT
RMT IN
SCART MUTE
LED
SCL3
SDA3
RST
VSS
XTAL
BUSY
AFT IN
KEY A
KEY B
SGV
SYNC MAIN
E2 MUTE
EPG POWER
EXT SPK
EASY-LINK0
EASY-LINK1
DTV/ATV
E1/E3 MUTE
AV3V
AVCC
CS
SCLK
BUSY
VCC
V3V
BOUT
ROUT
GOUT
IOUT
VGB1
BOR2
CPOUT
AVSS1
VCDIN
AVSS2
RESET
TEST
VSS
DOCK1
DOCK0
FM
EVEN
HSYNC
VSYNC
DISP
AC3Y
NC
CONV_RESET
CONVER YS
GND
CONVER B
CONVER G
CONVER R
TEXT R
TEXT B
TEXT RESET (TEXT MUTE)
TEXT G
YS OUT
NC (TEXT SYNC)
TV/TEXT
V-AV
HD
VD
SCL
SDA
+5V
HD OUT
BLK
CLAMP
VD OUT
B MASK
SCP2
VD 50
SDA2
SCL2
HD 15K

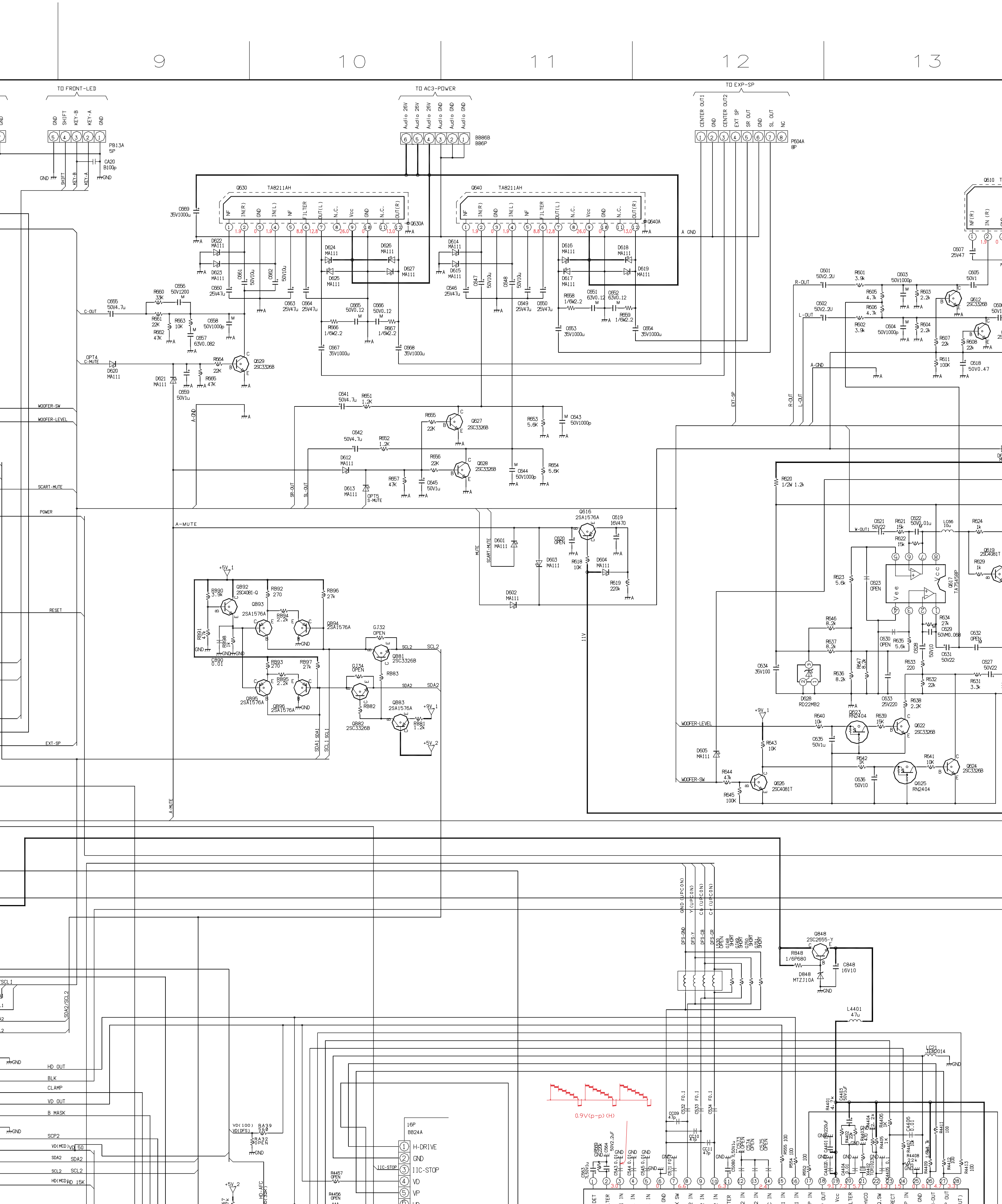

9
10
11
12
13
TO FRONT-LED
GND SHIFT KEY-B KEY-A GND
PB13A
5P
CA20
B100p
TO AC3-POWER
Audio 26V Audio 26V Audio 26V Audio GND Audio GND Audio GND
BB86B
BB6P
TO EXP-SP
CENTER OUT1 GND CENTER OUT2 EXT SP SR OUT GND SL OUT NC
P604A
8P
Q630 TA8211AH
Q640 TA8211AH
NF IN(R) GND IN(L) NF FILTER OUT(L) N.C. Vcc GND N.C. OUT(R)
1.9 0 1.9 8.8 12.8 26.0 0 13.0
Q630A
Q640A
A GND
C669 35V1000u
D622 MA111
D623 MA111
D624 MA111
D625 MA111
D626 MA111
D627 MA111
D614 MA111
D615 MA111
D616 MA111
D617 MA111
D618 MA111
D619 MA111
C660 25V47u
C661 50V10u
C662 50V10u
C663 25V47u
C664 25V47u
C665 50V0.12
C666 50V0.12
R666 1/6W2.2
R667 1/6W2.2
C667 35V1000u
C668 35V1000u
C646 25V47u
C647 50V10u
C648 50V10u
C649 25V47u
C650 25V47u
C651 63V0.12
C652 63V0.12
R658 1/6W2.2
R659 1/6W2.2
C653 35V1000u
C654 35V1000u
C-OUT
C655 50V4.7u
R660 33K
C656 50V1200
R661 22K
R662 47K
R663 10K
C657 63V0.082
C658 50V1000p
OPT4 C-MUTE
D620 MA111
D621 MA111
C659 50V1u
R664 22K
R665 47K
Q629 2SC3326B
WOOFER-SW
WOOFER-LEVEL
SCART-MUTE
POWER
RESET
EXT-SP
A-GND
C641 50V4.7u
R651 1.2K
R655 22K
Q627 2SC3326B
R653 5.6K
C643 50V1000p
C642 50V4.7u
R652 1.2K
D612 MA111
D613 MA111
OPT5 S-MUTE
R656 22K
R657 47K
C645 50V1u
Q628 2SC3326B
C644 50V1000p
R654 5.6K
SR-OUT
SL-OUT
EXT-SP
R-OUT
L-OUT
A-MUTE
Q616 2SA1576A
C619 16V470
C620 OPEN
MUTE
SCART-MUTE
D601 MA111
D603 MA111
R618 10K
D604 MA111
R619 220k
D602 MA111
11V
+5V_1
RB90 3.9k
QB92 2SC4081-Q
RB92 270
RB96 27k
QB93 2SA1576A
RB94 2.2k
QB94 2SA1576A
RB91 47k
RB98 1k
CB90 0.01
RB93 270
RB97 27k
RB95 2.2k
QB95 2SA1576A
QB96 2SA1576A
GJ32 OPEN
QB81 2SC3326B
SCL2
RB83
GJ34 OPEN
SDA2
RB82
QB82 2SC3326B
QB83 2SA1576A
+9V_1
RB81 1.2k
+5V_2
SDA1 SDA1
SCL1 SCL1
Q610
C607 25V47
C601 50V2.2U
R601 3.9k
C603 50V1000p
C605 50V1
R605 4.7k
R603 2.2k
Q612 2SC3326B
C602 50V2.2U
R606 4.7k
R602 3.9k
C604 50V1000p
R604 2.2k
R607 22k
R608 22k
R611 100K
C618 50V0.47
A-GND
R620 1/2W 1.2k
W-OUT1
C621 50V22
R621 15k
C622 50V0.01u
R622 15k
LC66 10u
R624 1k
Q619 2SC4081T
R629 1k
R623 5.6k
C623 OPEN
Vee
Vcc
Q617 TA75458P
R646 8.2k
R634 27k
C629 50VM0.068
C630 OPEN
R635 5.6k
C628 50V10
C632 OPEN
R637 8.2k
C631 50V22
C634 35V100
R647 8.2k
R633 220
C627 50V22
R636 8.2k
R632 22k
R631 3.3k
D628 RD22MB2
C633 25V220
R638 2.2K
+9V_1
WOOFER-LEVEL
R640 10k
Q623 RN2404
R639 15K
Q622 2SC3326B
C635 50V1u
R643 10K
D605 MA111
R642 1K
R641 10K
Q624 2SC3326B
R644 47k
WOOFER-SW
Q626 2SC4081T
C636 50V10
Q625 RN2404
R645 100K
GND (UPCON)
Y (UPCON)
Cb (UPCON)
Cr (UPCON)
DFS-GND
DFS-Y
DFS-CB
DFS-CR
L530 OPEN
GJ48 SHORT
GJ49 SHORT
GJ50 SHORT
GJ51 SHORT
Q848 2SC2655-Y
R848 1/6P680
C848 16V10
D848 MTZJ10A
L4401 47u
LC21 TEM2014
SDA2/SCL2
HD OUT
BLK
CLAMP
VD OUT
B MASK
SCP2
VD(MCD) VD 50
SDA2 SDA2
SCL2 SCL2
HD(MCD) HD 15K
VD(100)
VD(DFS)
RA39 560
RA32 OPEN
+5V_2
HD-AFC
16P
BB24A
H-DRIVE
GND
IIC-STOP
VD
VP
R4457 OPEN
R4456 OPEN
0.9V(p-p)(H)
CC09 47p
CC10 47p
CC11 47p
C532 F0.1
C533 F0.1
C534 F0.1
C563 7L50V1u
R569 220k
C564 50V2.2uF
C543 0.01
C544 0.01
C545 0.01
C571 F0.1
C5080 7L50V1u
C573 OPEN
C574 OPEN
C575 OPEN
R555 100
R554 100
R552 100
R4401 4.7k
C4403 50V1uF
C4401 16V220uF
C4402 0.01
R4402 22k
C4404 0.01
R4403 470
R4404 2.2k
X4402 TCR1023
R4405 1K
R4406 1K
C4405 0.1
C4406 0.01
R4407 10k
R4408 22k
R4409 1/8W4.7k
R4411 100
R4412 100
R4413 100
3.0 0 6.6 6.3 2.4 9.1 7.3 5.7 1.3 1.5 0 0.1 4.7 3.3
DET TER IN IN IN GND X SW IN IN IN TER IN IN IN IN IN IN OUT Vcc LTER HVCO SW RECT IN GND OUT OUT

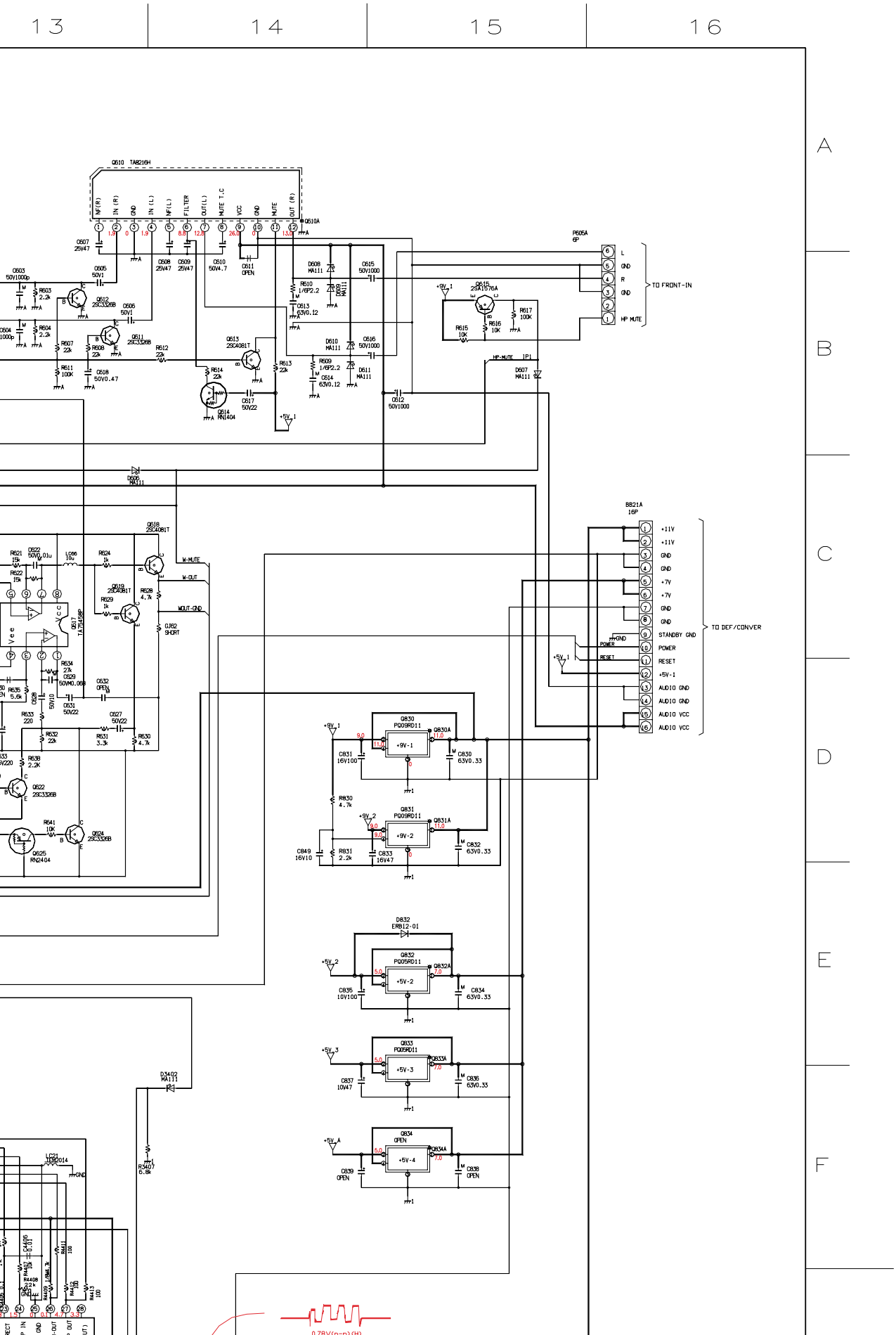
13
14
15
16
A
B
C
D
E
F
Q610 TA8216H
NF(R)
IN (R)
GND
IN (L)
NF(L)
FILTER
OUT(L)
MUTE T.C
VCC
GND
MUTE
OUT (R)
Q610A
P605A
6P
L
GND
R
GND
HP MUTE
TO FRONT-IN
HP-MUTE
IP1
B821A
16P
+11V
+11V
GND
GND
+7V
+7V
GND
GND
STANDBY GND
POWER
RESET
+5V-1
AUDIO GND
AUDIO GND
AUDIO VCC
AUDIO VCC
TO DEF/CONVER
W-MUTE
W-OUT
WOUT-GND
Q617
TA75458P
Q622
2SC3326B
Q624
2SC3326B
Q625
RN2404
Q830
PQ09RD11
Q831
PQ09RD11
Q832
PQ05RD11
Q833
PQ05RD11
Q834
OPEN
D832
ERB12-01
D3402
MA111
R3407
6.8k
LC21
LED2014
GND

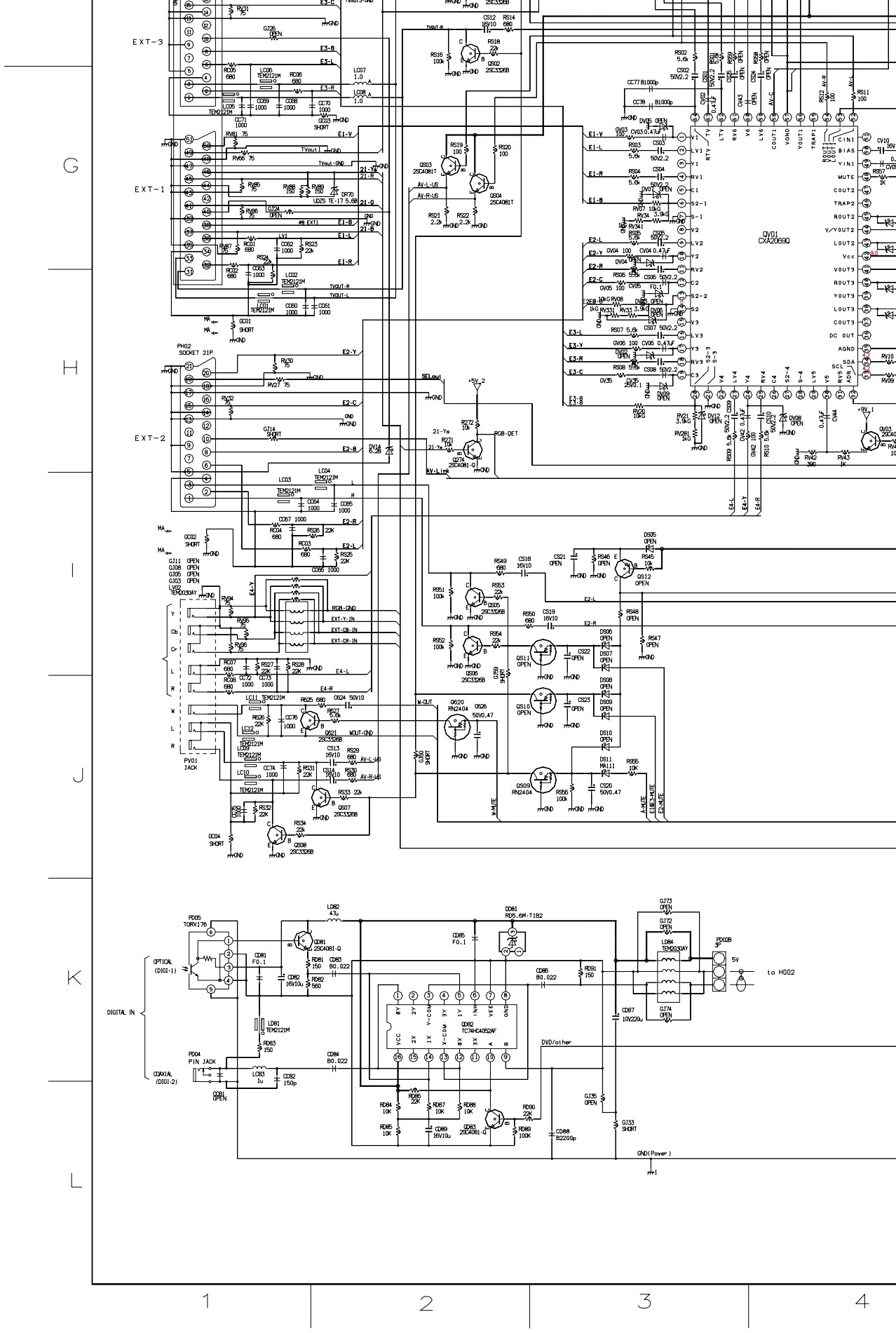
EXT-3
EXT-1
EXT-2
QV01
CX42069Q
PH02
SOCKET 21P
PV01
JACK
FD05
TORX176
OPTICAL
(DIGI-1)
DIGITAL IN
COAXIAL
(DIGI-2)
FD04
PIN JACK
DD81
RD5.6M-T1B2
DD82
TC74HC4052AF
DVD/other
to HDD2
GND(Power)
G
H
I
J
K
L
1
2
3
4

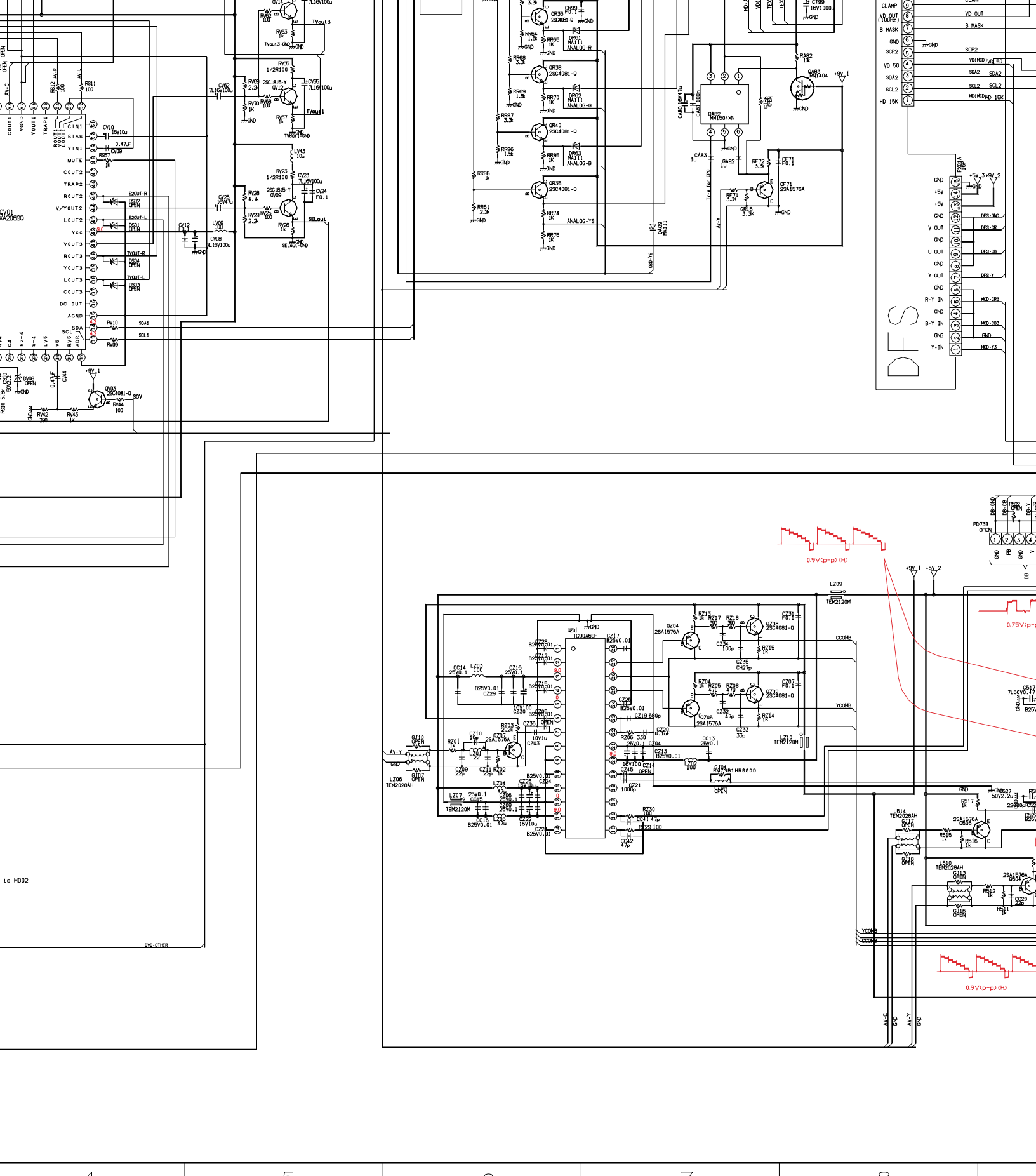

4 5 6 7 8

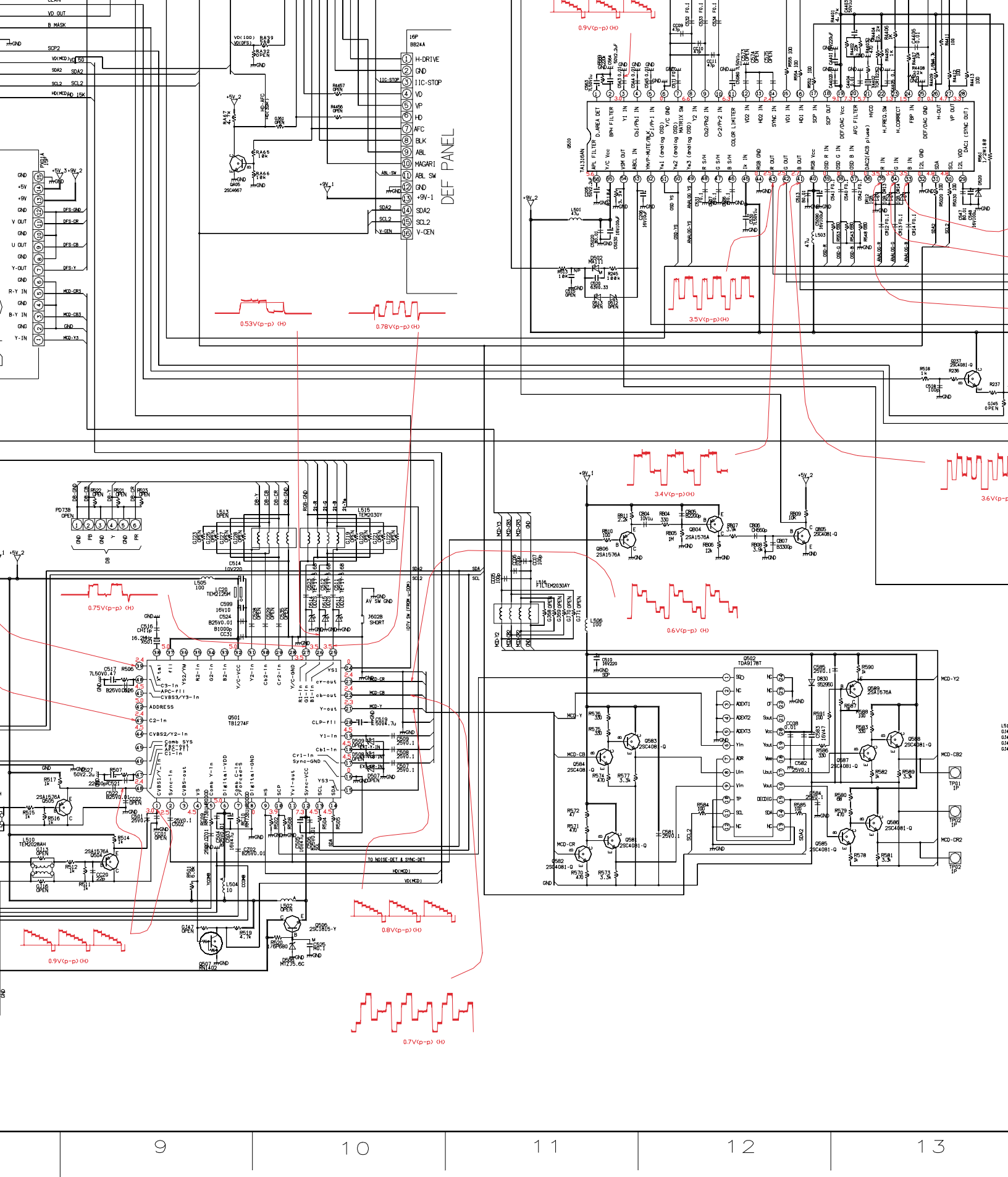
DEF PANEL
H-DRIVE
GND
IIC-STOP
VD
VP
HD
AFC
BLK
ABL
MAGARI
ABL SW
GND
+9V-1
SDA2
SCL2
V-CEN
0.9V(p-p) (H)
0.53V(p-p) (H)
0.78V(p-p) (H)
3.5V(p-p)(H)
3.4V(p-p)(H)
0.75V(p-p) (H)
0.6V(p-p) (H)
0.9V(p-p) (H)
0.8V(p-p) (H)
0.7V(p-p) (H)
Q501
TB1274F
Q502
TDA9178T
Q503
TA1316AN
Q510
TEM2028AH
L515
TEM2030Y
L516
FILTEM2030AY
L510
TEM2028AH
TO NOISE-DET & SYNC-DET

9 | 10 | 11 | 12 | 13

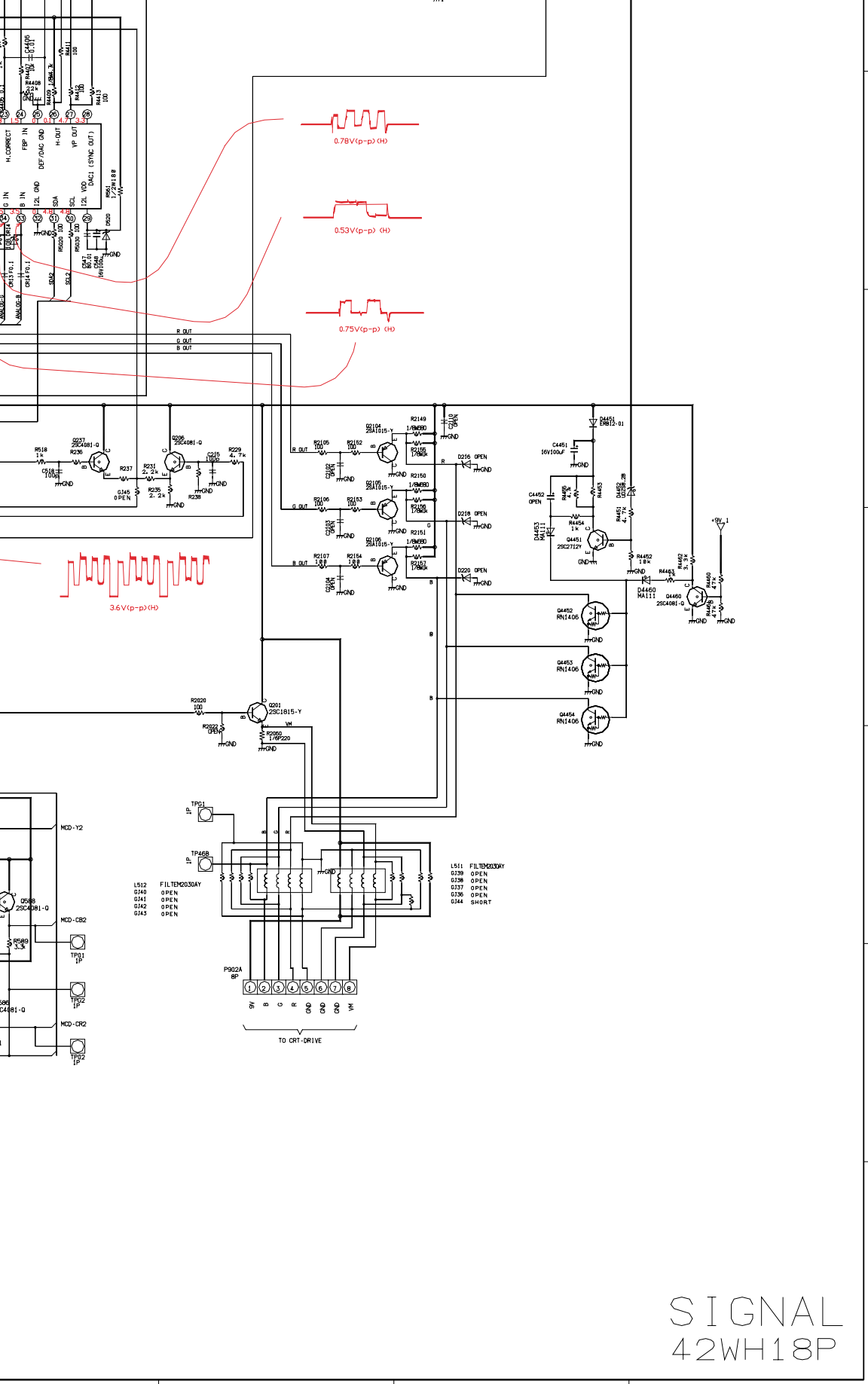

SIGNAL
42WH18P

G H I J K L

13 14 15 16

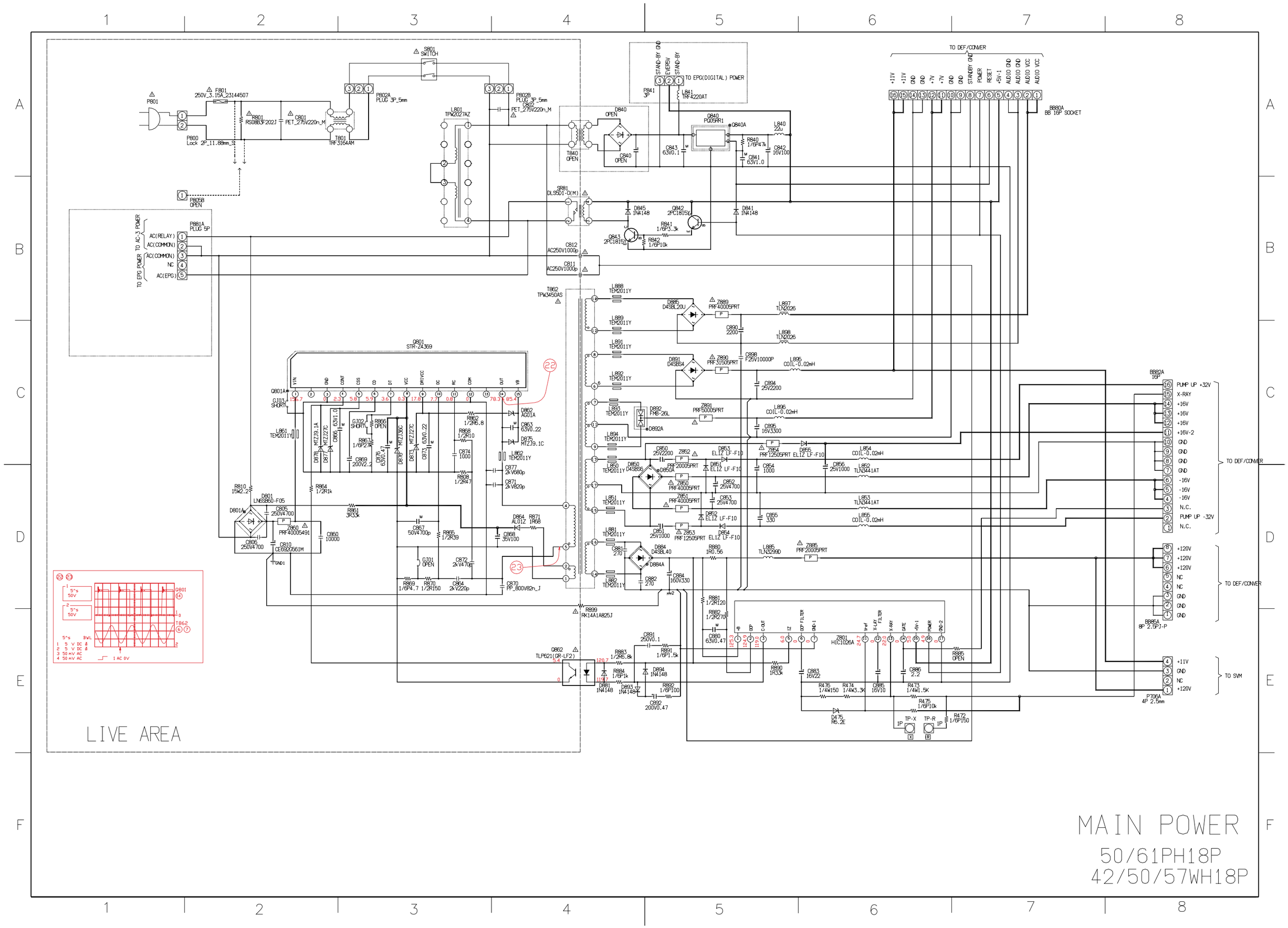
LIVE AREA
MAIN POWER
50/61PH18P
42/50/57WH18P
TO DEF/CONVER
TO EPG(DIGITAL) POWER
TO AC-3 POWER
TO EPG POWER
TO SVM
PUMP UP +32V
X-RAY
PUMP UP -32V
N.C.
+16V
+16V-2
GND
-16V
+120V
+11V
+5V-1
AUDIO GND
AUDIO VCC
STANDBY GND
POWER
RESET
+7V
+11V
GND
+7V
+7V
GND
GND
STANDBY GND
POWER
RESET
+5V-1
AUDIO GND
AUDIO GND
AUDIO VCC
AUDIO VCC
BB80A
BB 16P SOCKET
BB82A
16P
BB85A
8P 2.5PJ-P
P706A
4P 2.5mm
P801
P800
Lock 2P_11.88mm_S
F801
250V_3.15A_23144507
R801
RS0883F202J
C801
PET_275V220n_M
T801
TRF3164AM
P802A
PLUG 3P_5mm
S801
SWITCH
P802B
PLUG 3P_5mm
C802
PET_275V220n_M
L801
TPW2027AZ
P805B
OPEN
P881A
PLUG 5P
AC(RELAY)
AC(COMMON)
AC(COMMON)
NC
AC(EPG)
T840
OPEN
D840
OPEN
C840
OPEN
P841
3P
L841
TRF4220AT
Q840
PQ05RR1
Q840A
L840
22u
R840
1/6P47k
C842
16V100
C843
63V0.1
C841
63V1.0
SR81
DLS5D1-0(M)
D845
1N4148
Q842
2PC1815Y
D841
1N4148
R841
1/6P3.3k
Q843
2PC1815Y
R842
1/6P10k
C812
AC250V1000p
C811
AC250V1000p
T862
TPW3450AS
L888
TEM2011Y
L889
TEM2011Y
L891
TEM2011Y
L892
TEM2011Y
L893
TEM2011Y
L894
TEM2011Y
L850
TEM2011Y
L851
TEM2011Y
L881
TEM2011Y
L882
TEM2011Y
D885
D4SBL20U
Z889
PRF40005PRT
L897
TLN2026
C890
2200
L898
TLN2026
D891
D4SBS4
Z890
PRF31505PRT
C898
F25V10000P
L895
COIL-0.02mH
C894
25V2200
D892
FMB-26L
D892A
Z891
PRF50005PRT
L896
COIL-0.02mH
C895
16V3300
C850
25V2200
Z852
PRF20005PRT
D850
D4SBS6
D850A
Z850
PRF40005PRT
D853
EL1Z LF-F10
D851
EL1Z LF-F10
Z854
PRF12505PRT
D855
EL1Z LF-F10
L854
COIL-0.02mH
C854
1000
C856
25V1000
L852
TLN3441AT
C852
25V4700
C853
25V4700
Z851
PRF40005PRT
D852
EL1Z LF-F10
C855
330
L853
TLN3441AT
L855
COIL-0.02mH
C851
25V1000
Z853
PRF12505PRT
D854
EL1Z LF-F10
C881
270
D884
D4SBL40
D884A
R880
1R0.56
L885
TLN3299D
Z885
PRF20005PRT
C882
270
C884
160V330
R881
1/2R120
R882
1/2R270
C880
63V0.47
Z801
HIC1026A
R885
OPEN
R890
1R33k
C883
16V22
C886
2.2
R476
1/4W150
R474
1/4W3.3K
C885
16V10
R473
1/4W1.5K
R475
1/6P10k
D475
R6.2E
R472
1/6P150
TP-X
TP-R
Q801
STR-Z4369
Q801A
GJ03
SHORT
GJ02
SHORT
R866
OPEN
R867
1/6P27k
C869
200V2.2
C876
63V0.47
D876
MTZJ36C
D873
MTZJ27C
C873
63V0.22
R862
1/2R6.8
D862
AG01A
C863
63V0.22
D875
MTZJ9.1C
R868
1/2R10
C874
1000
L862
TEM2011Y
C877
2kV680p
C871
2kV820p
R808
1/2R47
L861
TEM2011Y
D878
MTZJ9.1A
D877
MTZJ27C
C866
63V1.0
R810
15W2.2
R864
1/2R1k
D801
LN6SB60-F05
D801A
C805
250V4700
Z860
PRF40005491
C860
10000
C806
250V4700
C810
CE6920561M
GND1
R861
3R33k
C867
50V4700p
R865
1/2R39
D864
AL01Z
R871
1R68
C868
35V100
GJ01
OPEN
C872
2kV470p
R869
1/6P4.7
R870
1/2R150
C864
2kV220p
C870
PP_800V82n_J
R899
RK14A1A825J
Q862
TLP621(GR-LF2)
R883
1/2R6.8k
R884
1/6P1k
D881
1N4148
D893
1N4148
D894
1N4148
R891
1/6P1.5k
R892
1/6P100
C892
200V0.47
C891
250V0.1
22
23

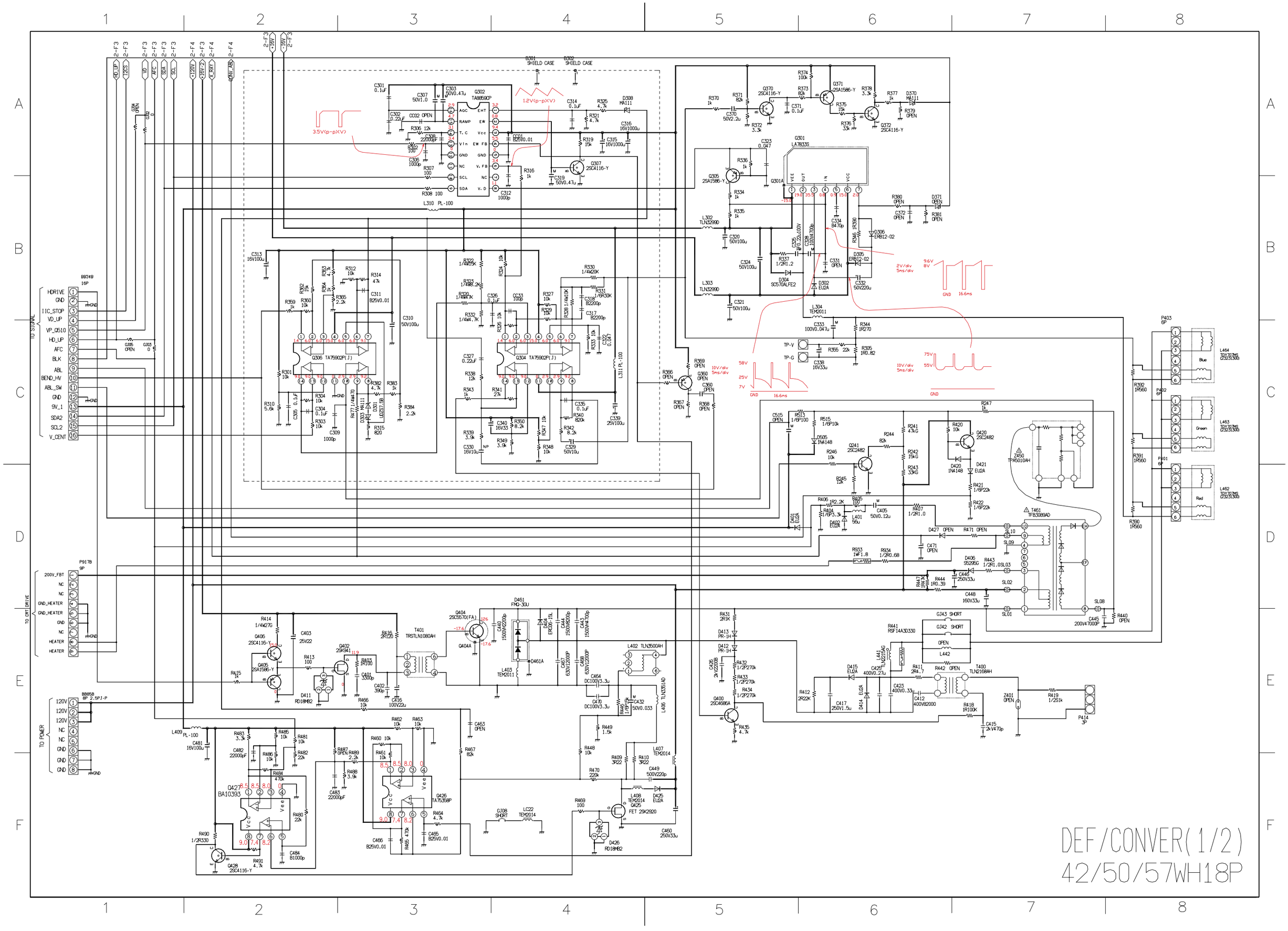
DEF/CONVER(1/2)
42/50/57WH18P
TO SIGNAL
TO DRIVE
TO POWER
HDRIVE
GND
IIC_STOP
VD_UP
VP_0510
HD_UP
AFC
BLK
ABL
BEND_HV
ABL_SW
9V_1
SDA2
SCL2
V_CENT
200V_FBT
GND_HEATER
HEATER
120V
SHIELD CASE
TA8859CP
TA75902P(J)
LA78033S
TLN3299D
TEM2011
TPA5010AH
TFB3089AD
TRSTLN1080AH
TLN2168AH
BA10393
TA75358P
FET 2SK2920

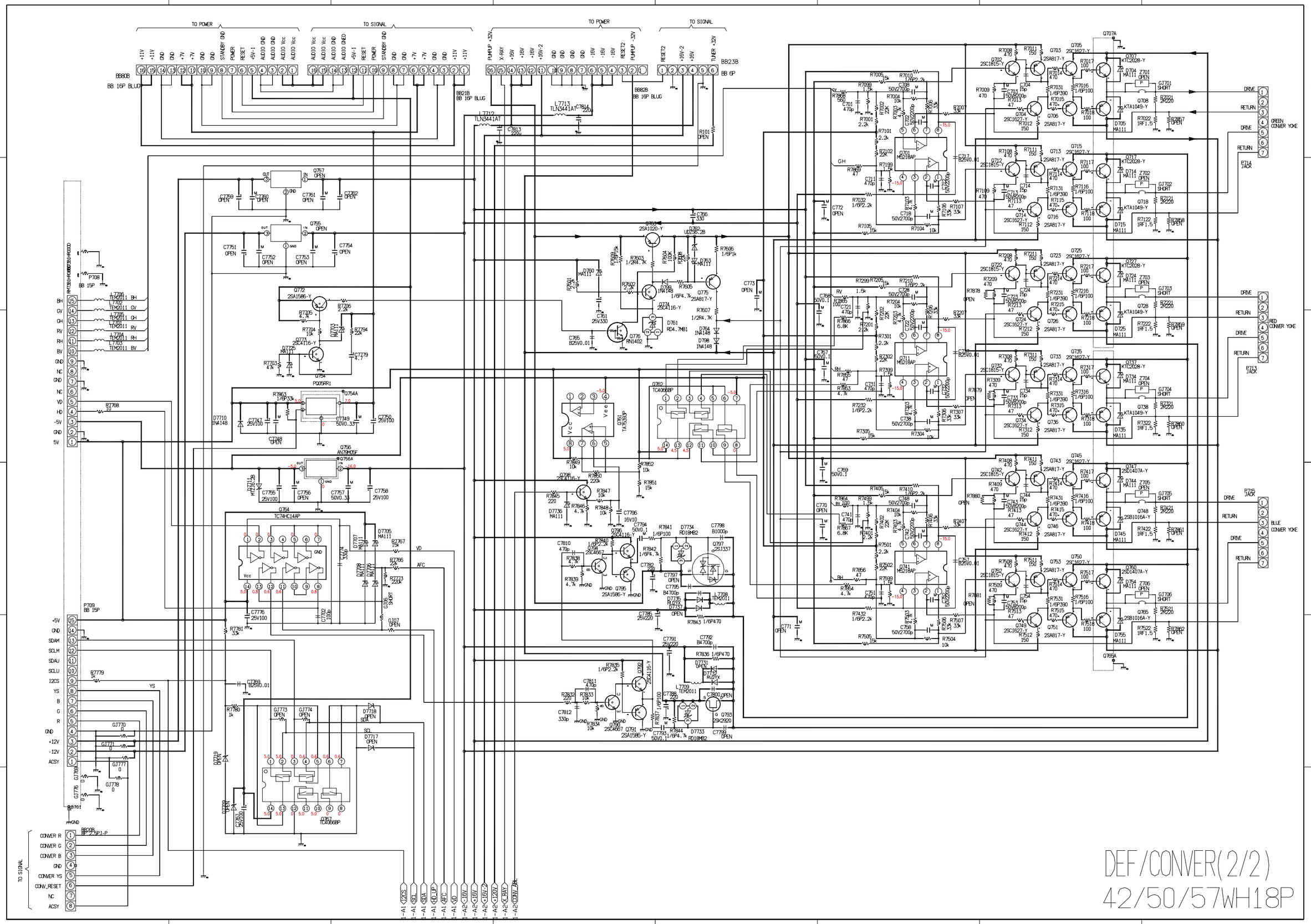
TO POWER
TO SIGNAL
TO POWER
TO SIGNAL
BB80B
BB 16P BLUE
BB21B
BB 16P BLUE
BB23B
BB 6P
P708
BB 15P
P709
BB 15P
BB20B
BF25SP1-P
TO SIGNAL
CONVER R
CONVER G
CONVER B
GND
CONVER YS
CONV_RESET
NC
ACSY
DRIVE
RETURN
GREEN CONVER YOKE
RED CONVER YOKE
BLUE CONVER YOKE
R714 JACK
R713 JACK
R715 JACK
DEF/CONVER(2/2)
42/50/57WH18P

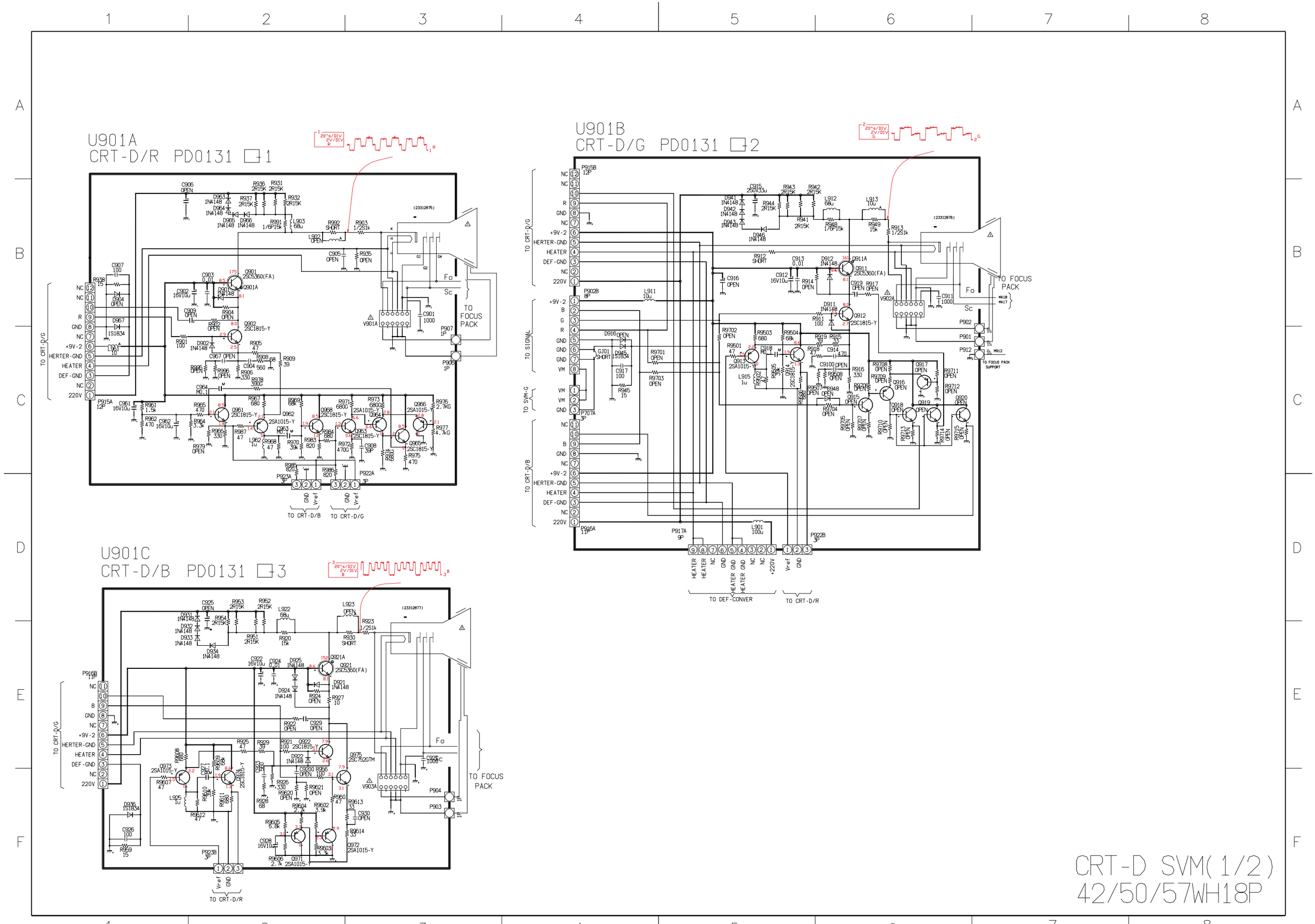
U901A
CRT-D/R PD0131 1
U901B
CRT-D/G PD0131 2
U901C
CRT-D/B PD0131 3
TO CRT-D/G
TO SIGNAL
TO SVM-G
TO CRT-D/B
TO FOCUS PACK
TO DEF-CONVER
TO CRT-D/R
CRT-D SVM(1/2)
42/50/57WH18P

U901E
SVM R PD0131 □-5

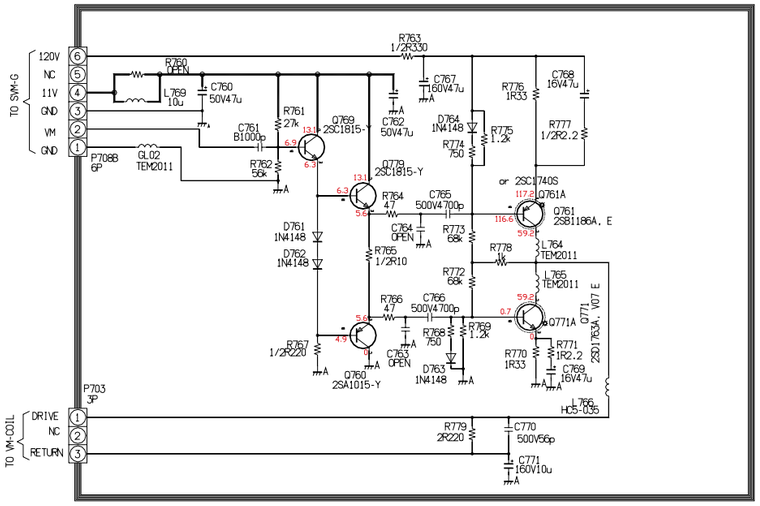

U901D
PD0131 □-4
SVM G

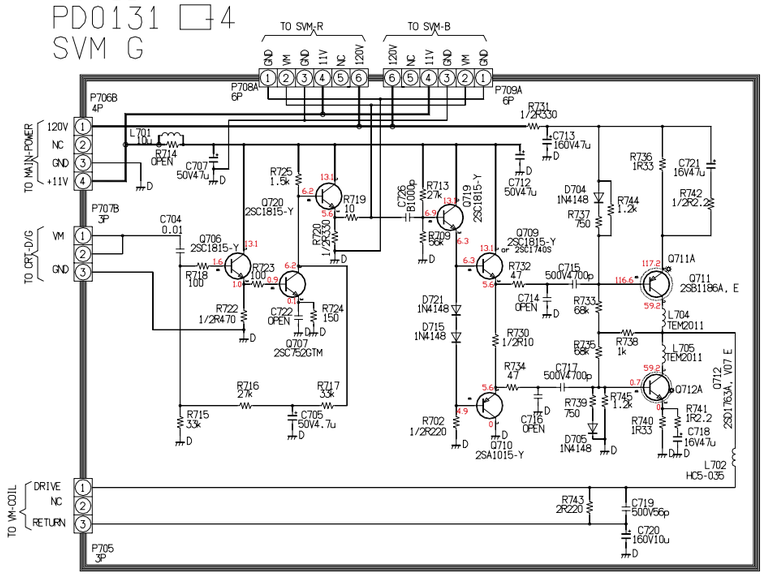

U901F
SVM B
PD0131 □-6

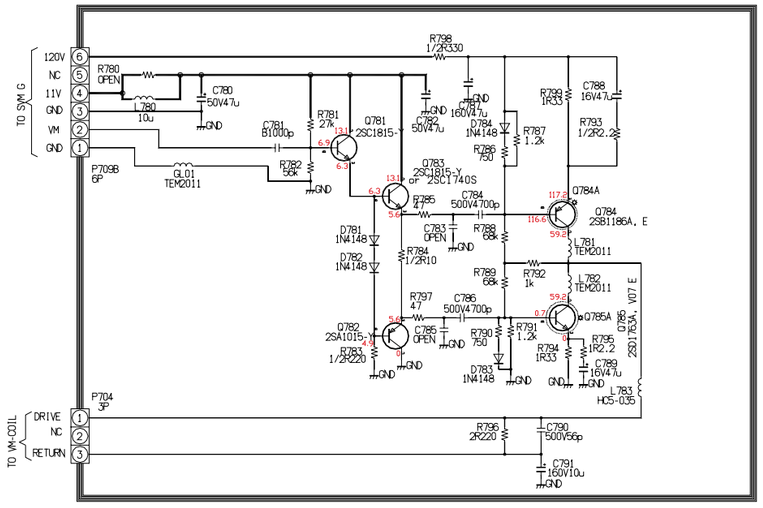

CRT-D SVM(2/2)
42/50/57WH18P

PB9486 G/H/J
DIGITAL CONVER

	CH173 CH-241	CH174 CH-244	CH175 CH-242	CH176 CH-243 RH-207	RH-201 RH-202	RH-203 RH-204	RH-205 RH-206	GJ01 GJ02
TNP 4:3	16KB	×	×	×	○	×	○	○
TNP 16:9	16KB	8KB	×	×	○	×	○	○
TIU 4:3	16KB	16KB	×	×	○	×	○	○
TIU 16:9	16KB	16KB	16KB	○	○	○	○	×
TSP 4:3	16KB	16KB	×	×	○	×	○	○
DLTV 4:3	16KB	16KB	×	×	○	×	○	○

GJ03	GJ04
PAL 100Hz	OTHER

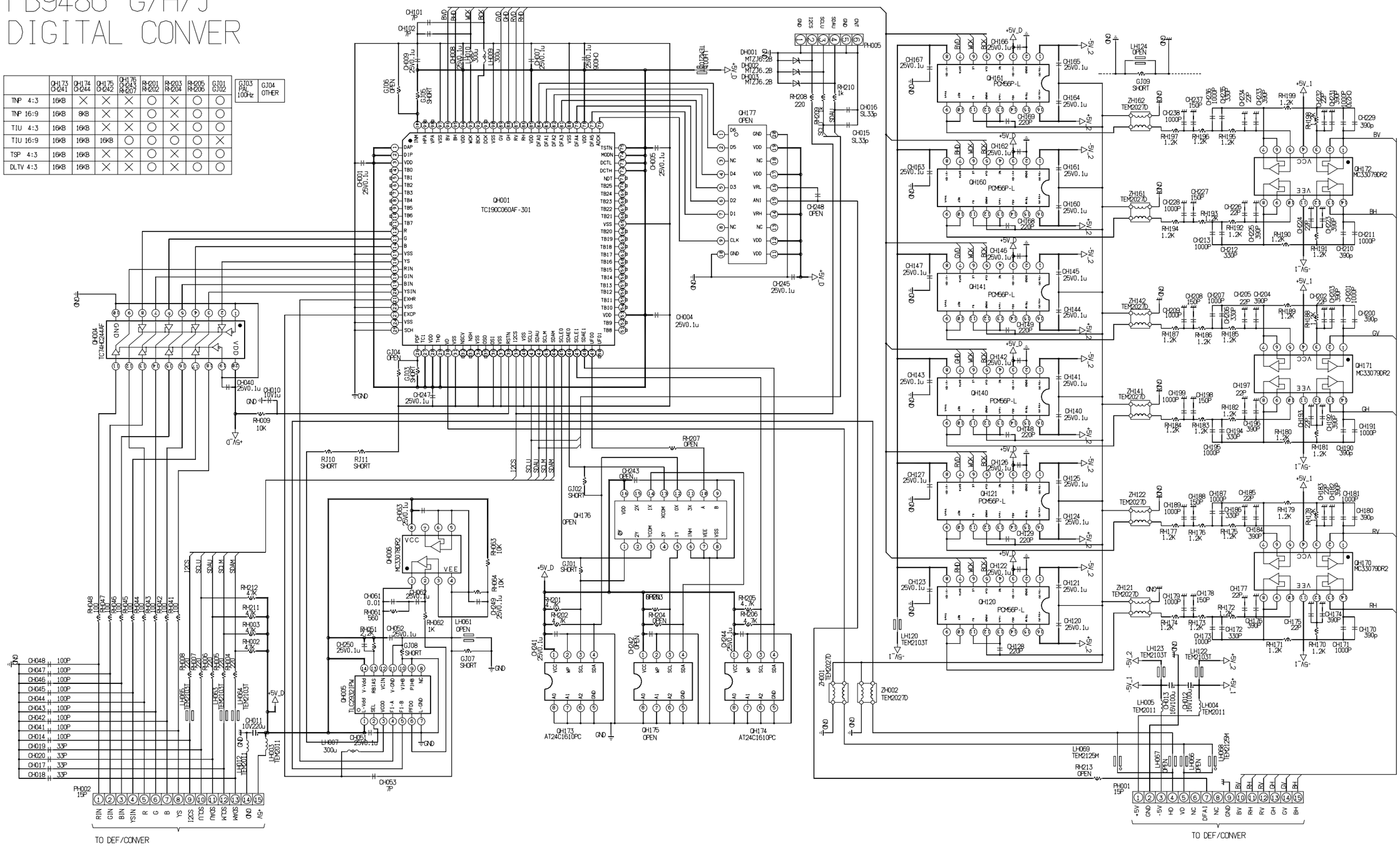

D-CONVER
42/50/57WH18P

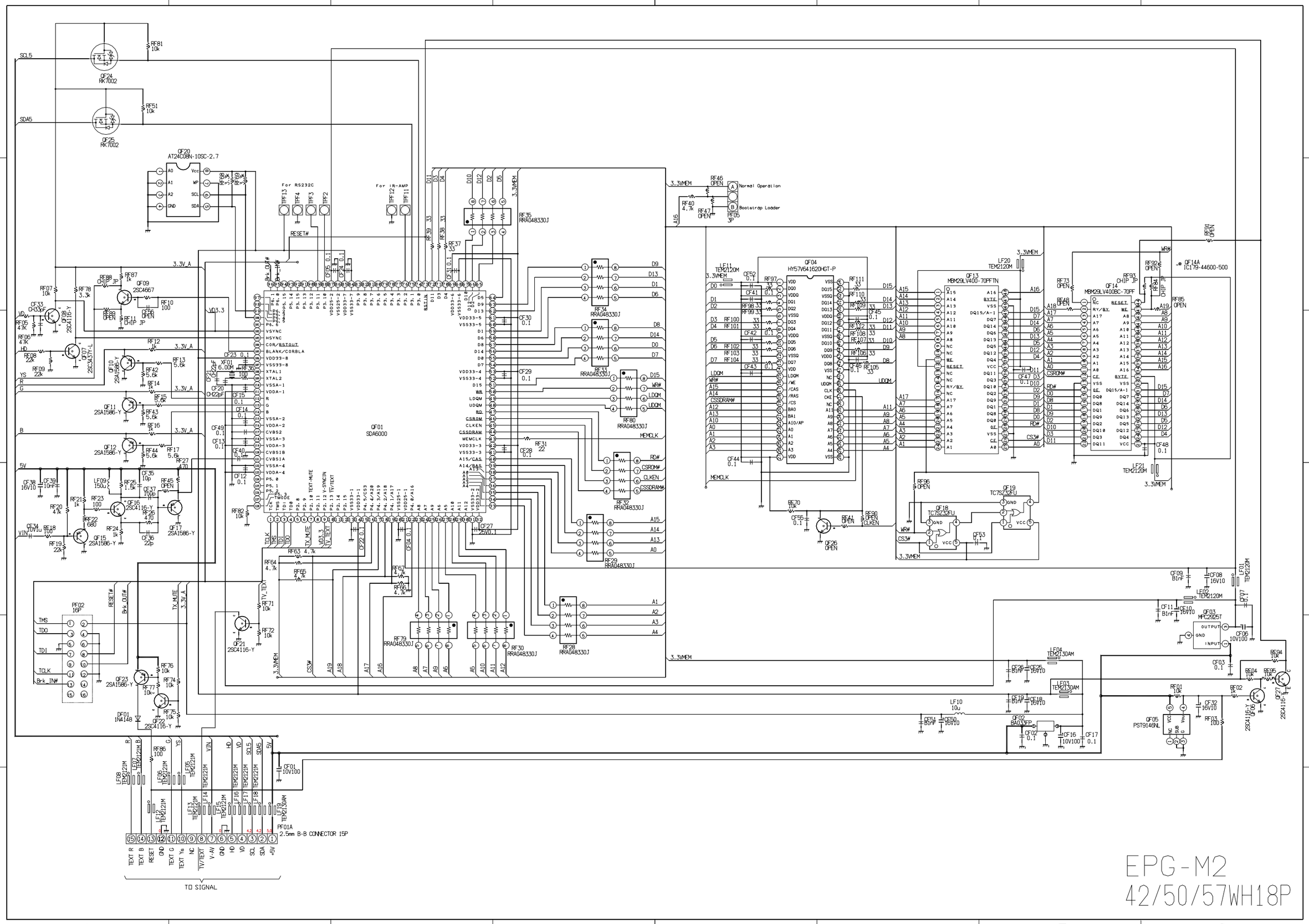
EPG-M2
42/50/57WH18P
QF20
AT24C08N-10SC-2.7
QF01
SDA6000
QF04
HY57V641620HGT-P
QF13
MBM29LV400-70PFTN
QF14
MBM29LV400BC-70PF
QF14A
IC179-44600-500
QF03
MPC2925T
QF05
PST9146NL
QF02
BA033FP
PF01A
2.5mm B-B CONNECTOR 15P
TO SIGNAL
For RS232C
For IR-AMP
Normal Operation
Bootstrap Loader

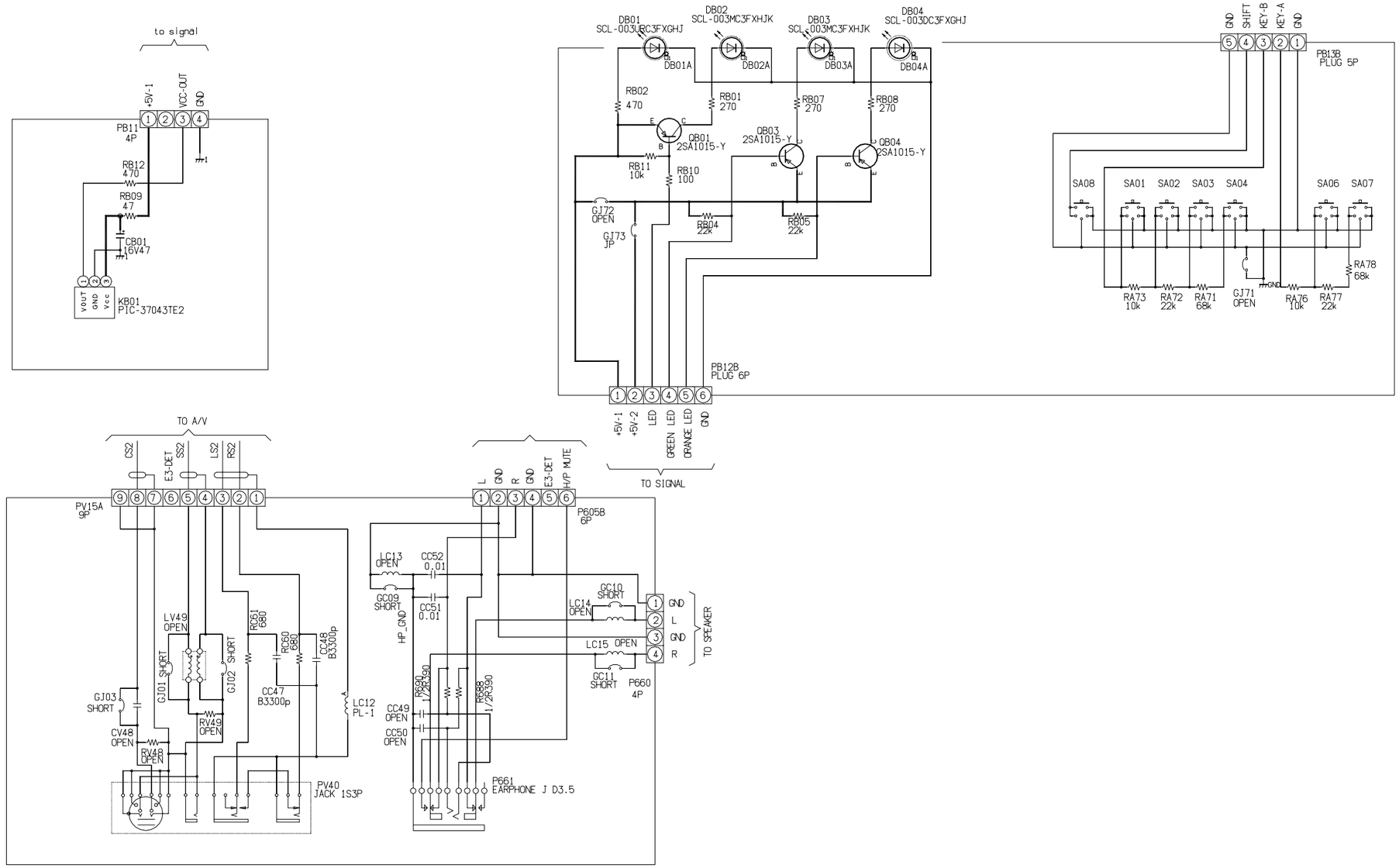

FRONT-IN/RMT/KEY
42/50/57WH18P

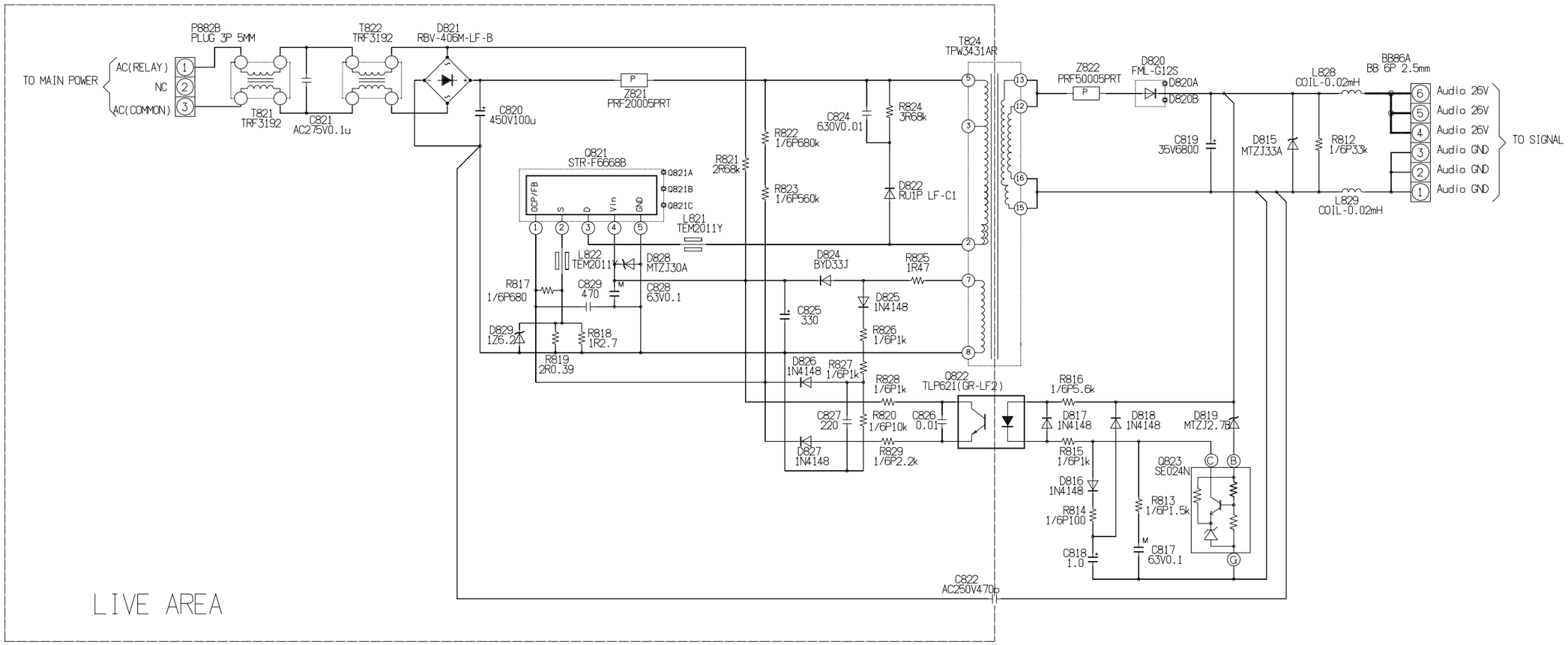

AC-3 POWER
50/61PH18P
42/50/57WH18P

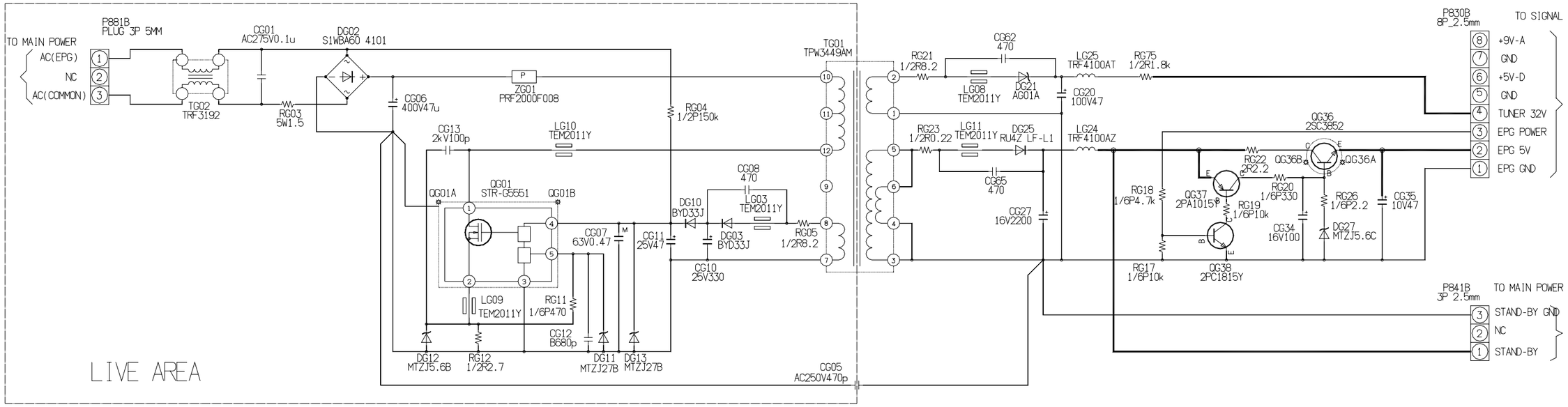

EPG POWER

50/61PH18P
42/50/57WH18P

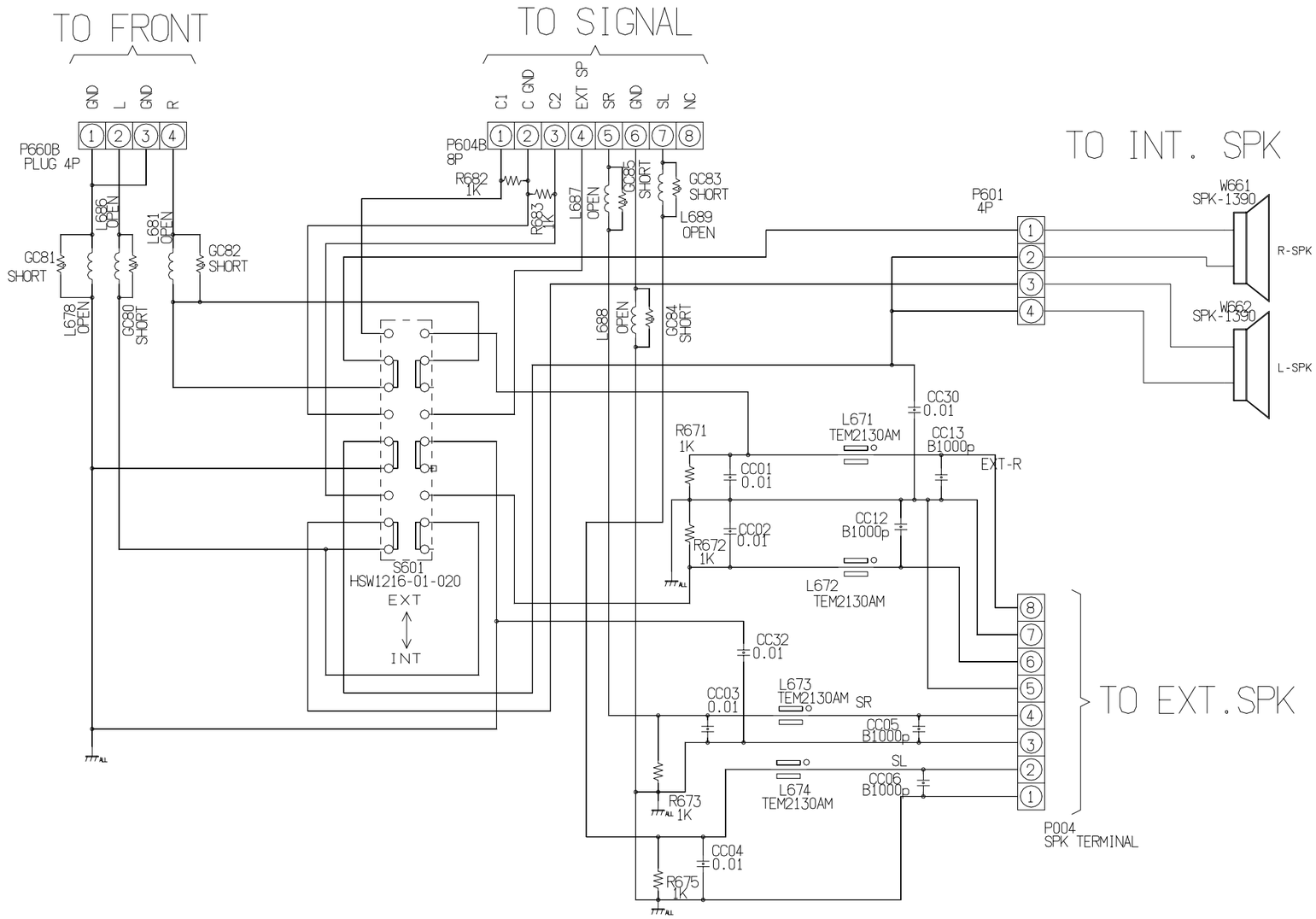

EXT-SP
50/61PH18P
42/50/57WH18P

U105 DFS Ver4.01Dual SDRAM PB9954

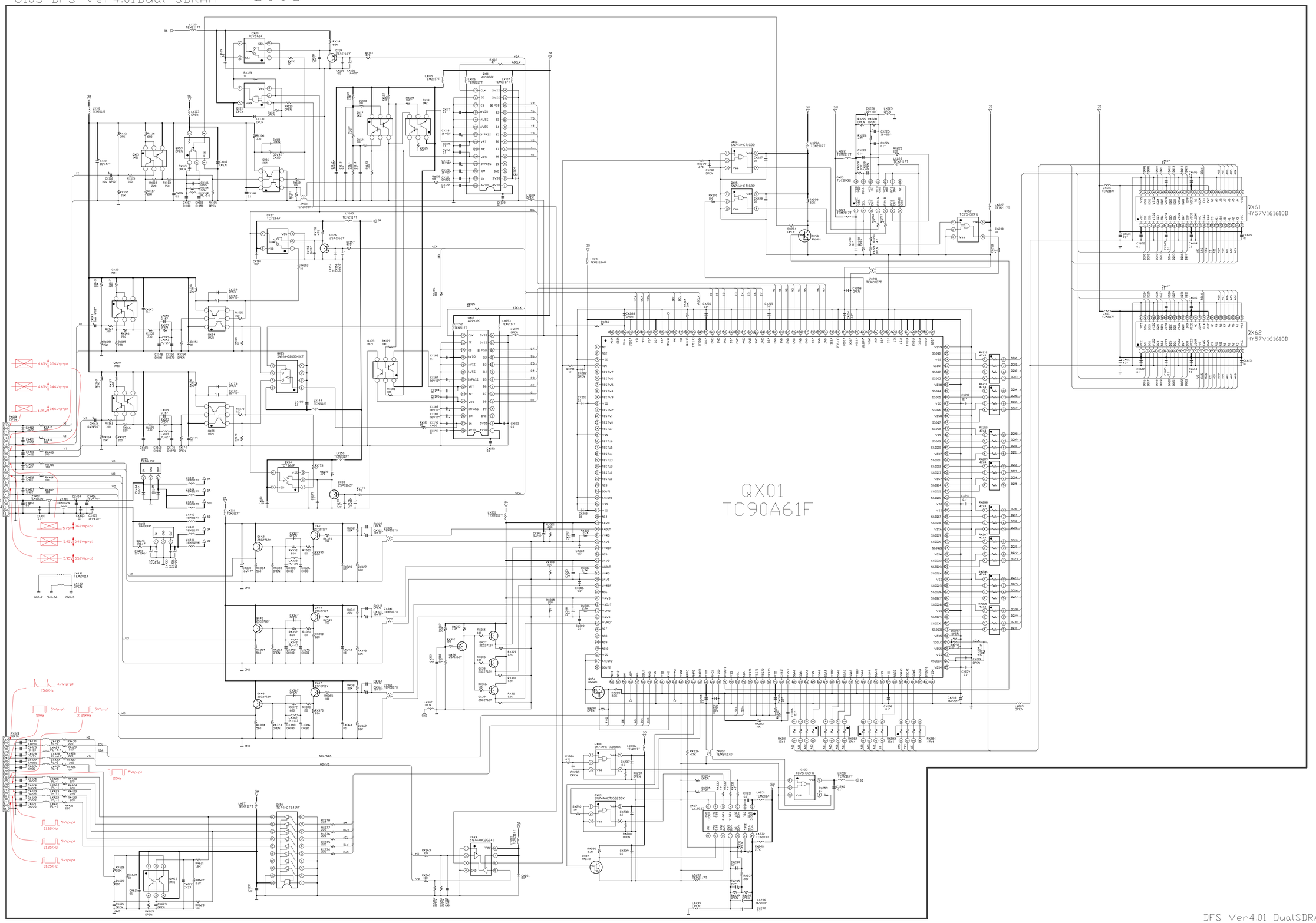

DFS Ver4.01 DualSDRAM
42WH18P

U105 DFS Ver4.01Dual SDRAM PB9

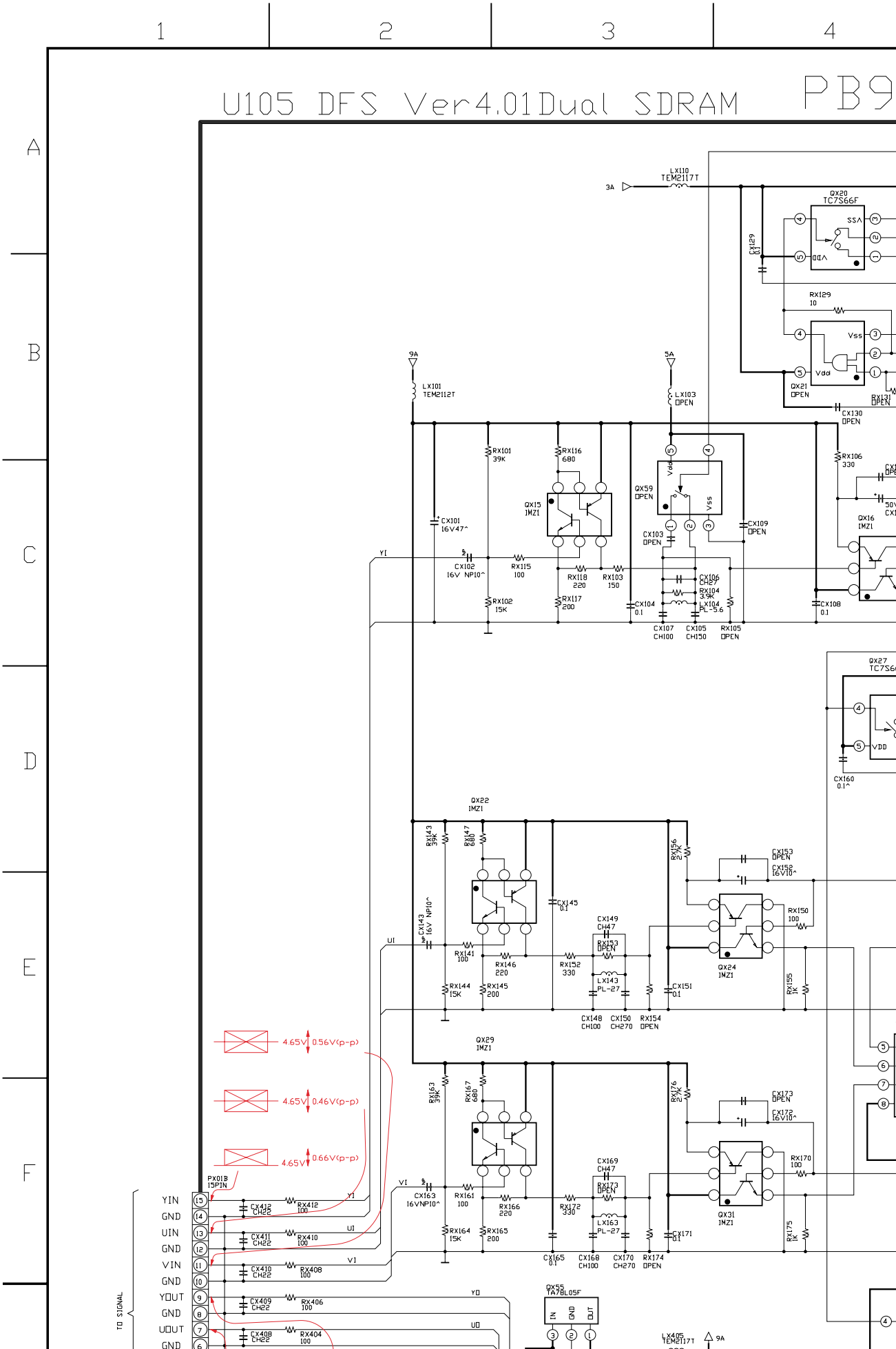

PB9954

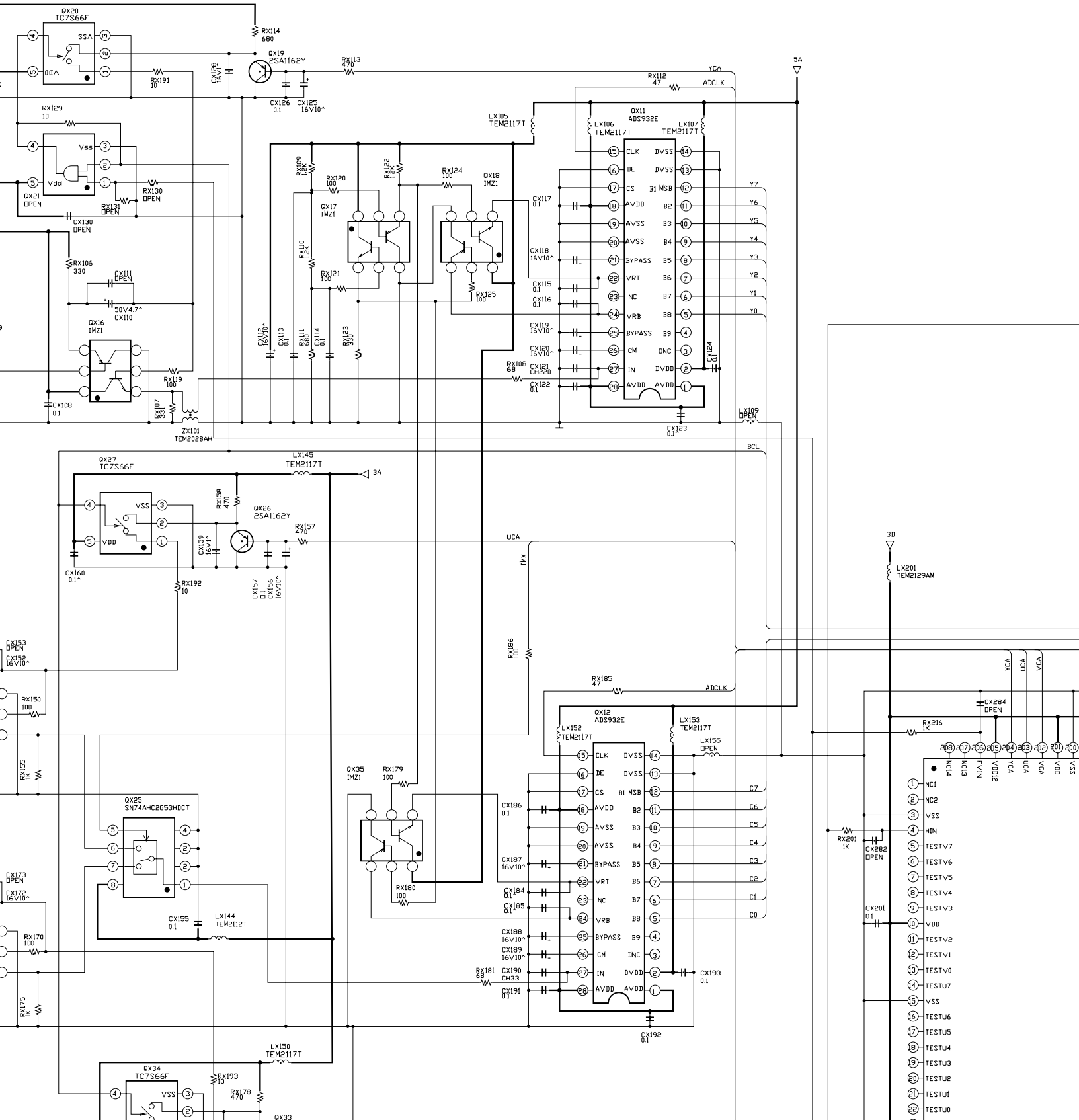
QX20
TC7S66F
RX114
680
QX19
2SA1162Y
RX113
470
RX191
10
CX128
16V1^
CX126
0.1
CX125
16V10^
RX129
10
QX21
OPEN
RX130
OPEN
RX131
OPEN
CX130
OPEN
RX106
330
CX111
OPEN
50V4.7^
CX110
QX16
IMZ1
RX119
100
CX108
0.1
RX107
33
ZX101
TEM2028AH
RX109
1.2K
RX120
100
RX122
1.2K
RX124
100
QX18
IMZ1
QX17
IMZ1
RX110
1.2K
RX121
100
RX125
100
CX112
16V10^
CX113
0.1
RX111
680
CX114
0.1
RX123
330
LX105
TEM2117T
LX106
TEM2117T
LX107
TEM2117T
QX11
ADS932E
CLK
DE
CS
AVDD
AVSS
AVSS
BYPASS
VRT
NC
VRB
BYPASS
CM
IN
AVDD
DVSS
DVSS
B1 MSB
B2
B3
B4
B5
B6
B7
B8
B9
DNC
DVDD
AVDD
CX117
0.1
CX118
16V10^
CX115
0.1
CX116
0.1
CX119
16V10^
CX120
16V10^
CX121
CH220
CX122
0.1
RX108
68
CX124
0.1
CX123
0.1
LX109
OPEN
YCA
ADCLK
5A
Y7
Y6
Y5
Y4
Y3
Y2
Y1
Y0
BCL
QX27
TC7S66F
LX145
TEM2117T
3A
RX158
470
QX26
2SA1162Y
RX157
470
CX159
16V1^
CX160
0.1^
RX192
10
CX157
0.1
CX156
16V10^
UCA
1MX
RX186
100
CX153
OPEN
CX152
16V10^
RX150
100
RX155
1K
QX25
SN74AHC2G53HDCT
CX173
OPEN
CX172
16V10^
CX155
0.1
LX144
TEM2112T
RX170
100
RX175
1K
QX35
IMZ1
RX179
100
RX180
100
RX185
47
ADCLK
QX12
ADS932E
LX152
TEM2117T
LX153
TEM2117T
LX155
OPEN
CX186
0.1
CX187
16V10^
CX184
0.1^
CX185
0.1^
CX188
16V10^
CX189
16V10^
CX190
CH33
CX191
0.1
RX181
68
CX193
0.1
CX192
0.1
C7
C6
C5
C4
C3
C2
C1
C0
3D
LX201
TEM2129AN
CX284
OPEN
RX216
1K
RX201
1K
CX282
OPEN
CX201
0.1
NC14
NC13
FVIN
VDD12
YCA
UCA
VCA
VDD
VSS
NC1
NC2
VSS
HIN
TESTV7
TESTV6
TESTV5
TESTV4
TESTV3
VDD
TESTV2
TESTV1
TESTV0
TESTU7
VSS
TESTU6
TESTU5
TESTU4
TESTU3
TESTU2
TESTU1
TESTU0
LX150
TEM2117T
QX34
TC7S66F
RX193
10
RX178
470
QX33

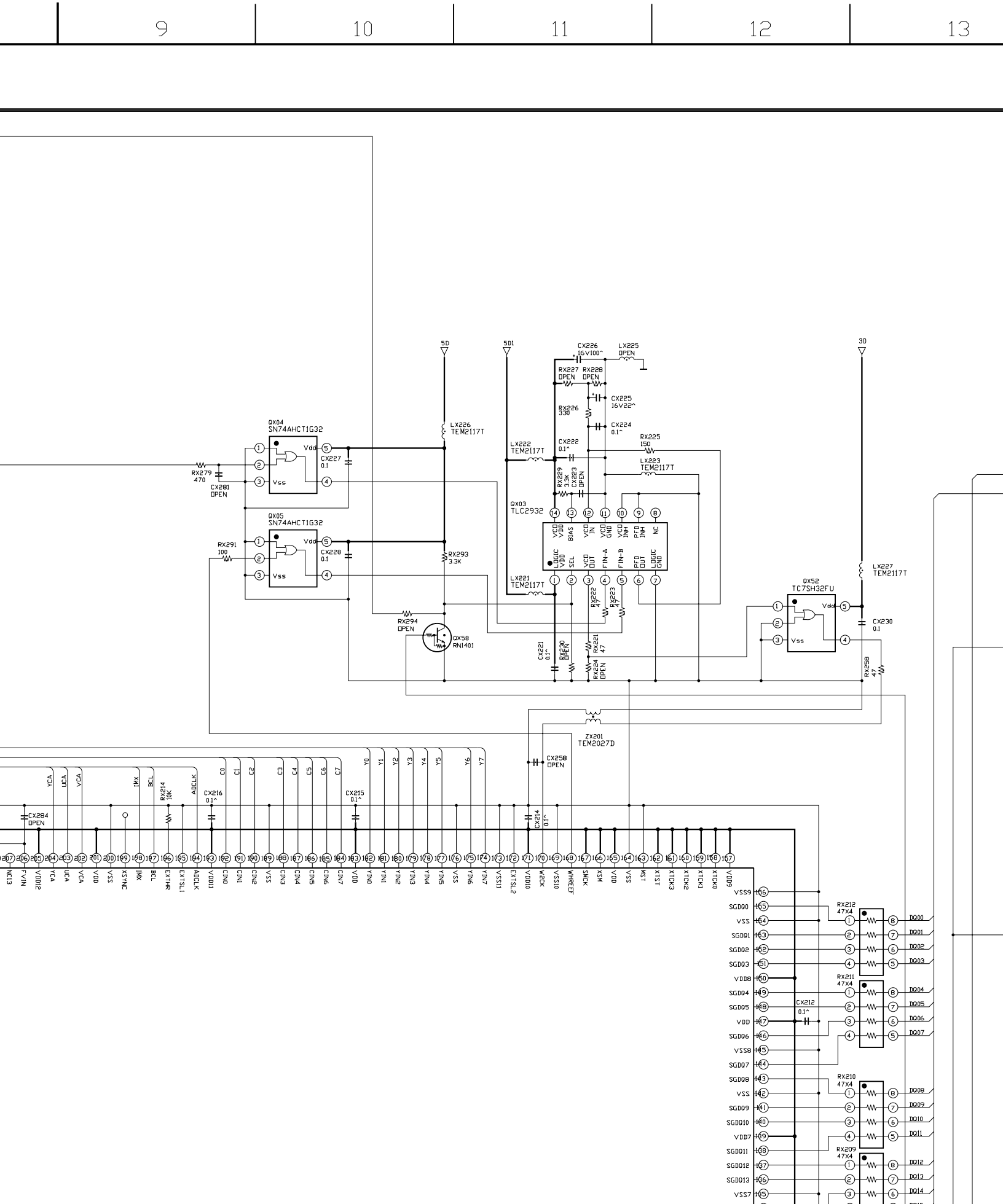
9
10
11
12
13
QX04
SN74AHCT1G32
QX05
SN74AHCT1G32
QX03
TLC2932
QX52
TC7SH32FU
QX58
RN1401
ZX201
TEM2027D
LX226
TEM2117T
LX222
TEM2117T
LX223
TEM2117T
LX221
TEM2117T
LX227
TEM2117T
LX225
OPEN
CX226
16V100^
CX225
16V22^
CX224
0.1^
CX222
0.1^
CX221
0.1^
CX227
0.1
CX228
0.1
CX230
0.1
CX281
OPEN
CX284
OPEN
CX216
0.1^
CX215
0.1^
CX214
0.1^
CX258
OPEN
CX212
0.1^
RX279
470
RX291
100
RX293
3.3K
RX294
OPEN
RX214
10K
RX212
47X4
RX211
47X4
RX210
47X4
RX209
47X4
RX258
47
5D
5D1
3D

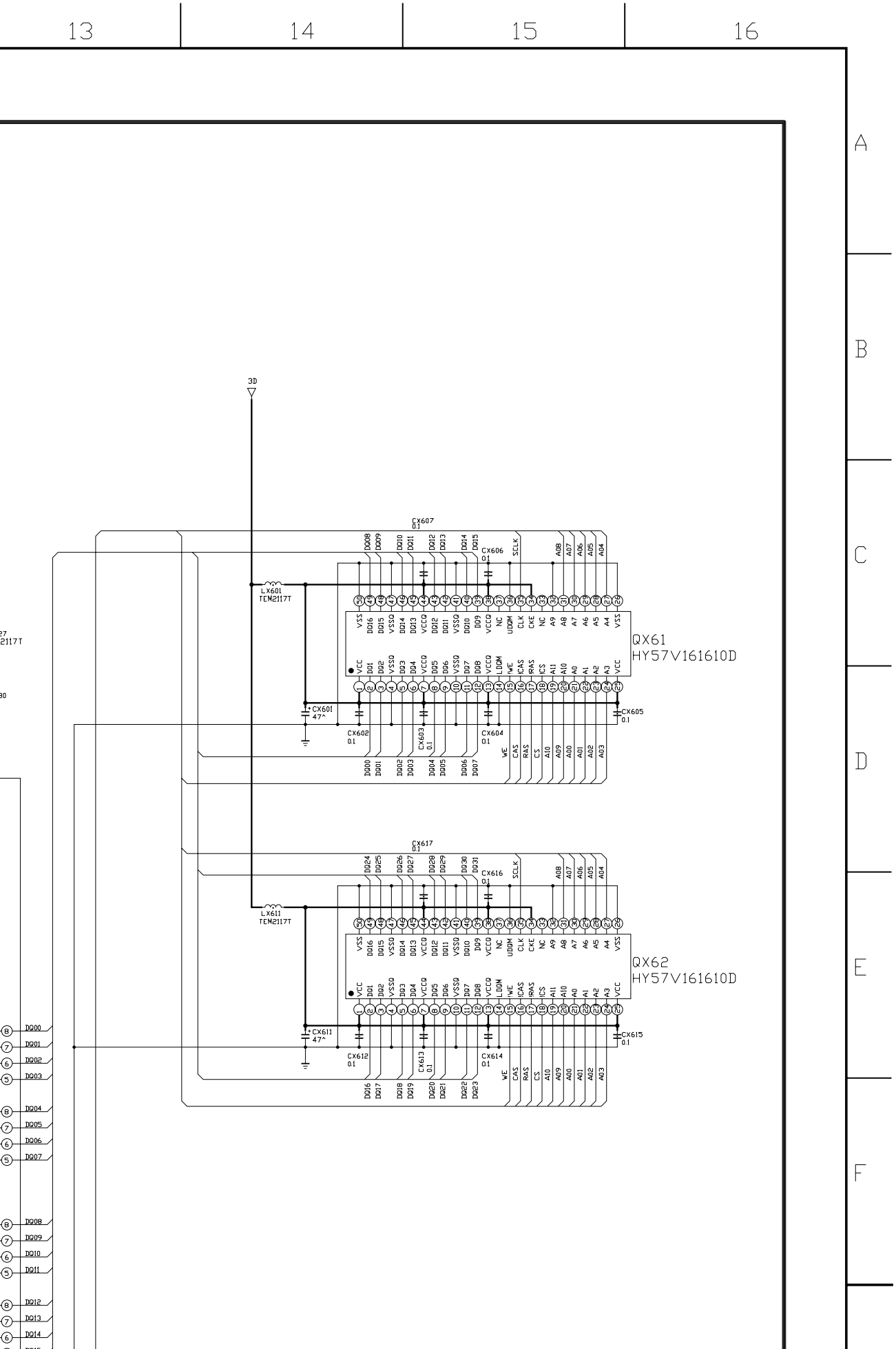
13
14
15
16
A
B
C
D
E
F
3D
CX607
0.1
CX606
0.1
LX601
TEM2117T
QX61
HY57V161610D
CX601
47^
CX602
0.1
CX603
0.1
CX604
0.1
CX605
0.1
CX617
0.1
CX616
0.1
LX611
TEM2117T
QX62
HY57V161610D
CX611
47^
CX612
0.1
CX613
0.1
CX614
0.1
CX615
0.1
DQ00
DQ01
DQ02
DQ03
DQ04
DQ05
DQ06
DQ07
DQ08
DQ09
DQ10
DQ11
DQ12
DQ13
DQ14
DQ15

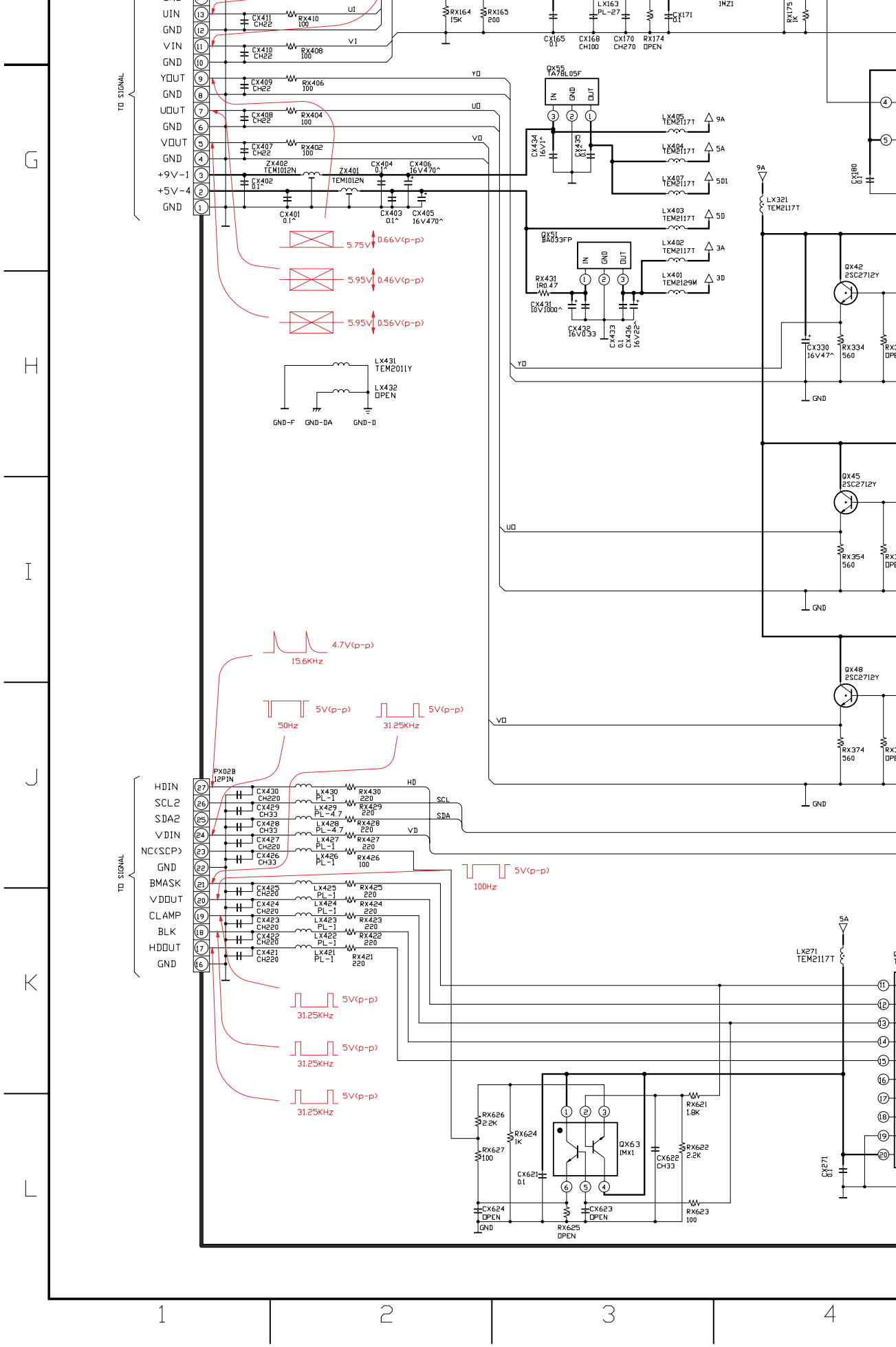
TO SIGNAL
UIN
GND
VIN
GND
YOUT
GND
UOUT
GND
VOUT
GND
+9V-1
+5V-4
GND
CX411 CH22
RX410 100
CX410 CH22
RX408 100
CX409 CH22
RX406 100
CX408 CH22
RX404 100
CX407 CH22
RX402 100
ZX402 TEM1012N
ZX401 TEM1012N
CX402 0.1^
CX401 0.1^
CX404 0.1^
CX406 16V470^
CX403 0.1^
CX405 16V470^
5.75V 0.66V(p-p)
5.95V 0.46V(p-p)
5.95V 0.56V(p-p)
LX431 TEM2011Y
LX432 OPEN
GND-F
GND-DA
GND-D
QX55 TA78L05F
IN GND OUT
CX434 16V1^
CX435 0.1
LX405 TEM2117T
LX404 TEM2117T
LX407 TEM2117T
LX403 TEM2117T
LX402 TEM2117T
LX401 TEM2129M
QX51 BA033FP
RX431 1R0.47
CX431 10V1000^
CX432 16V0.33
CX433 0.1
CX436 16V22^
LX321 TEM2117T
QX42 2SC2712Y
CX330 16V47^
RX334 560
QX45 2SC2712Y
RX354 560
QX48 2SC2712Y
RX374 560
GND
4.7V(p-p)
15.6KHz
5V(p-p)
50Hz
5V(p-p)
31.25KHz
PX028 12PIN
HDIN
SCL2
SDA2
VDIN
NC(SCP)
GND
BMASK
VDOUT
CLAMP
BLK
HDOUT
GND
CX430 CH220
LX430 PL-1
RX430 220
CX429 CH33
LX429 PL-4.7
RX429 220
CX428 CH33
LX428 PL-4.7
RX428 220
CX427 CH220
LX427 PL-1
RX427 220
CX426 CH33
LX426 PL-1
RX426 100
CX425 CH220
LX425 PL-1
RX425 220
CX424 CH220
LX424 PL-1
RX424 220
CX423 CH220
LX423 PL-1
RX423 220
CX422 CH220
LX422 PL-1
RX422 220
CX421 CH220
LX421 PL-1
RX421 220
5V(p-p)
100Hz
5V(p-p)
31.25KHz
5V(p-p)
31.25KHz
5V(p-p)
31.25KHz
LX271 TEM2117T
RX626 2.2K
RX624 1K
RX627 100
CX621 0.1
QX63 IMX1
RX621 1.8K
RX622 2.2K
CX622 CH33
CX624 OPEN
CX623 OPEN
RX625 OPEN
RX623 100
CX271 0.1

1 2 3 4

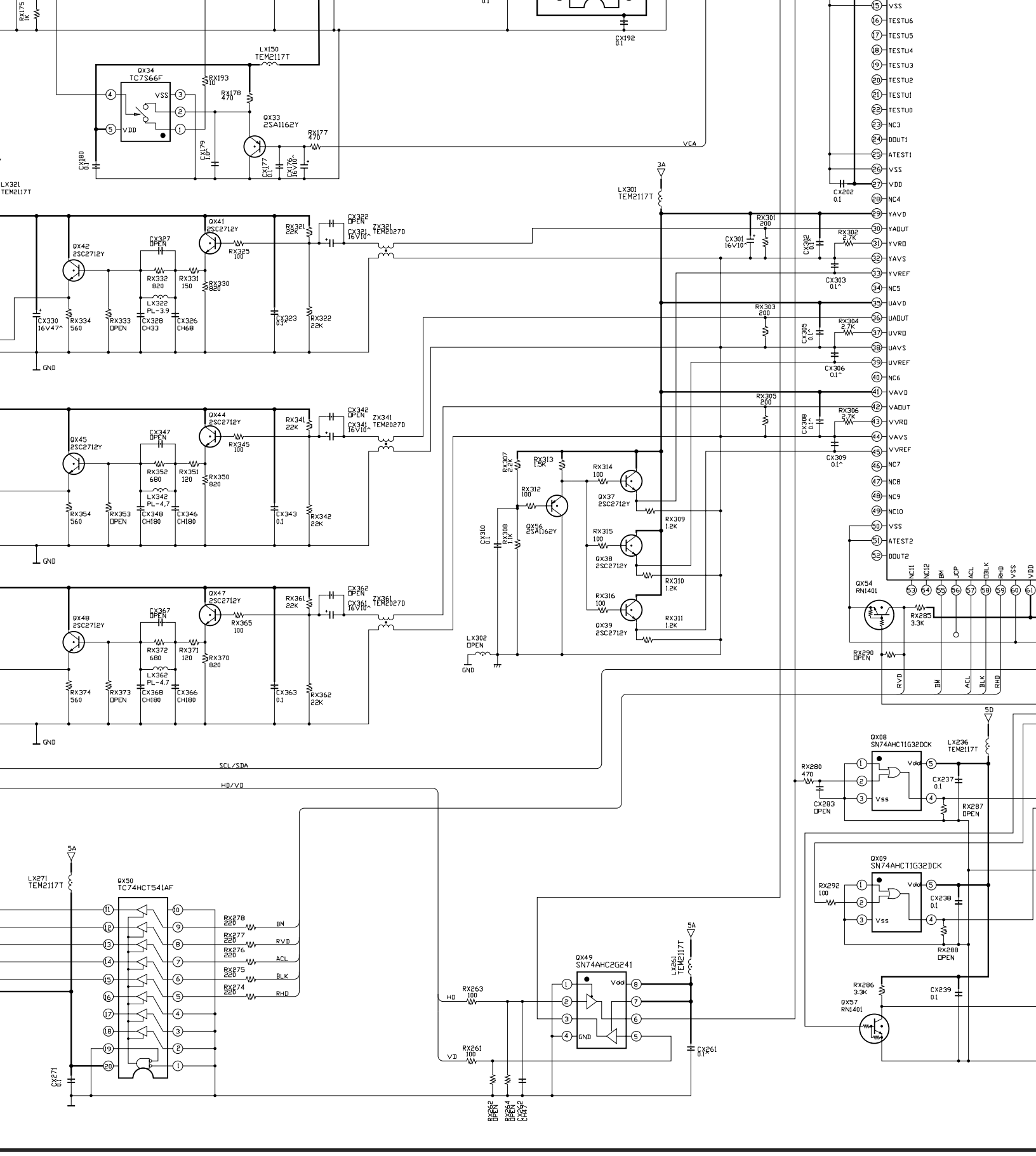
QX34
TC7S66F
VSS
VDD
LX150
TEM2117T
RX193
10
RX178
470
QX33
2SA1162Y
RX177
470
CX180
0.1
CX179
10^
CX177
0.1
CX178
16V10^
VCA
LX321
TEM2117T
QX41
2SC2712Y
QX42
2SC2712Y
CX327
OPEN
RX321
22K
CX322
OPEN
CX321
16V10^
ZX321
TEM2027D
RX325
100
RX332
820
RX331
150
RX330
820
LX322
PL-3.9
CX330
16V47^
RX334
560
RX333
OPEN
CX328
CH33
CX326
CH68
CX323
0.1
RX322
22K
GND
QX44
2SC2712Y
QX45
2SC2712Y
CX347
OPEN
RX341
22K
CX342
OPEN
CX341
16V10^
ZX341
TEM2027D
RX345
100
RX352
680
RX351
120
RX350
820
LX342
PL-4.7
RX354
560
RX353
OPEN
CX348
CH180
CX346
CH180
CX343
0.1
RX342
22K
GND
QX47
2SC2712Y
QX48
2SC2712Y
CX367
OPEN
RX361
22K
CX362
OPEN
CX361
16V10^
ZX361
TEM2027D
RX365
100
RX372
680
RX371
120
RX370
820
LX362
PL-4.7
RX374
560
RX373
OPEN
CX368
CH180
CX366
CH180
CX363
0.1
RX362
22K
GND
SCL/SDA
HD/VD
LX301
TEM2117T
3A
RX301
200
CX301
16V10^
CX302
0.1
RX302
2.7K
CX303
0.1^
RX303
200
CX305
0.1^
RX304
2.7K
CX306
0.1^
RX305
200
CX308
0.1^
RX306
2.7K
CX309
0.1^
RX307
2.2K
RX313
1.5K
RX312
100
QX56
2SA1162Y
CX310
0.1
RX308
1.1K
RX314
100
QX37
2SC2712Y
RX309
1.2K
RX315
100
QX38
2SC2712Y
RX310
1.2K
RX316
100
QX39
2SC2712Y
RX311
1.2K
LX302
OPEN
GND
VSS
TESTU6
TESTU5
TESTU4
TESTU3
TESTU2
TESTU1
TESTU0
NC3
DOUT1
ATEST1
VSS
VDD
NC4
YAVD
YAOUT
YVRD
YAVS
YVREF
NC5
UAVD
UAOUT
UVRD
UAVS
UVREF
NC6
VAVD
VAOUT
VVRD
VAVS
VVREF
NC7
NC8
NC9
NC10
VSS
ATEST2
DOUT2
CX192
0.1
CX202
0.1
QX54
RN1401
NC11
NC12
BM
JCP
ACL
DBLK
RHD
VSS
VDD
RX285
3.3K
RX290
OPEN
RVD
BM
ACL
BLK
RHD
5D
QX08
SN74AHCT1G32DCK
LX236
TEM2117T
RX280
470
CX237
0.1
CX283
OPEN
RX287
OPEN
QX09
SN74AHCT1G32DCK
RX292
100
CX238
0.1
RX288
OPEN
RX286
3.3K
CX239
0.1
QX57
RN1401
5A
LX271
TEM2117T
QX50
TC74HCT541AF
RX278
220
BM
RX277
220
RVD
RX276
220
ACL
RX275
220
BLK
RX274
220
RHD
CX271
0.1
QX49
SN74AHC2G241
Vdd
GND
HD
RX263
100
VD
RX261
100
5A
LX261
TEM2117T
CX261
0.1
RX262
OPEN
RX264
OPEN
CX262
CX487

4 | 5 | 6 | 7 | 8

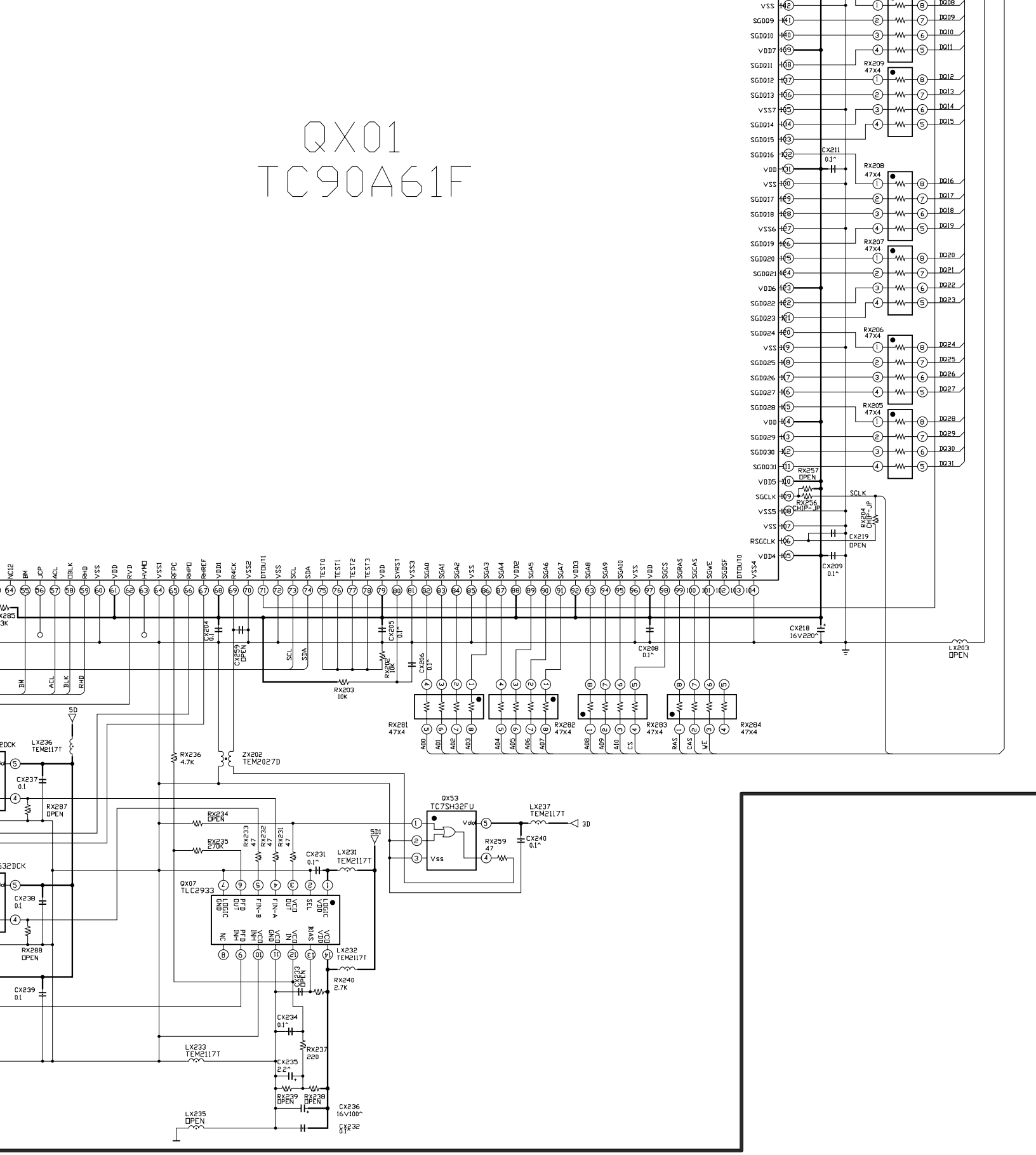
QX01
TC90A61F
RX209 47X4
RX208 47X4
RX207 47X4
RX206 47X4
RX205 47X4
RX257 OPEN
RX256 CHIP-JP
RX204 CHIP-JP
CX211 0.1^
CX219 OPEN
CX209 0.1^
CX218 16V220^
LX203 OPEN
CX208 0.1^
CX206 0.1^
CX205 0.1^
RX202 10K
RX203 10K
CX204 0.1^
CX259 OPEN
RX281 47X4
RX282 47X4
RX283 47X4
RX284 47X4
LX236 TEM2117T
CX237 0.1
RX287 OPEN
RX236 4.7K
ZX202 TEM2027D
RX234 OPEN
RX235 270K
RX233 47
RX232 47
RX231 47
CX231 0.1^
LX231 TEM2117T
QX53 TC7SH32FU
LX237 TEM2117T
CX240 0.1^
RX259 47
QX07 TLC2933
CX238 0.1
RX288 OPEN
CX239 0.1
LX232 TEM2117T
CX233 OPEN
RX240 2.7K
CX234 0.1^
RX237 220
LX233 TEM2117T
CX235 2.2^
RX239 OPEN
RX238 OPEN
CX236 16V100^
CX232 0.1^
LX235 OPEN
9
10
11
12
13

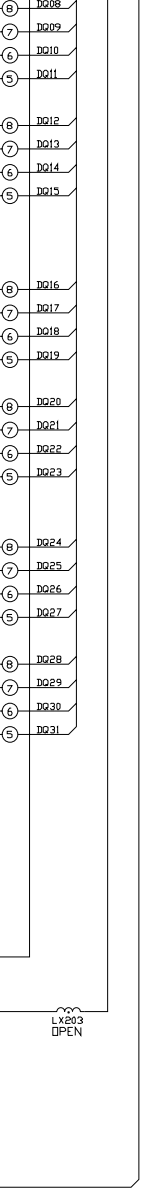

DFS Ver4.01 DualSDRAM
42WH18P

PC BOARDS LAYOUT TOP VIEW

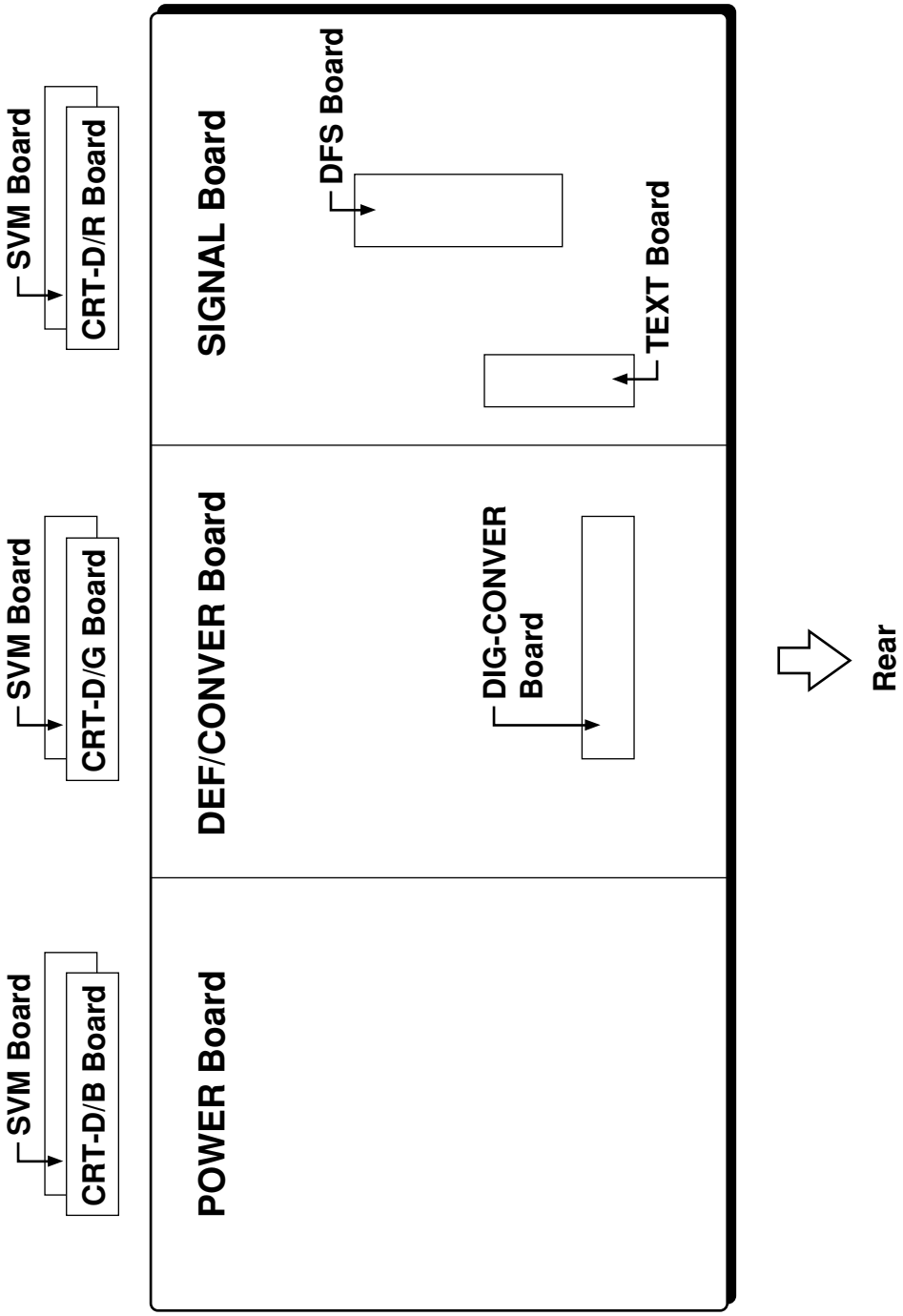

SIGNAL BOARD PD0128D

BOTTOM (FOIL) SIDE

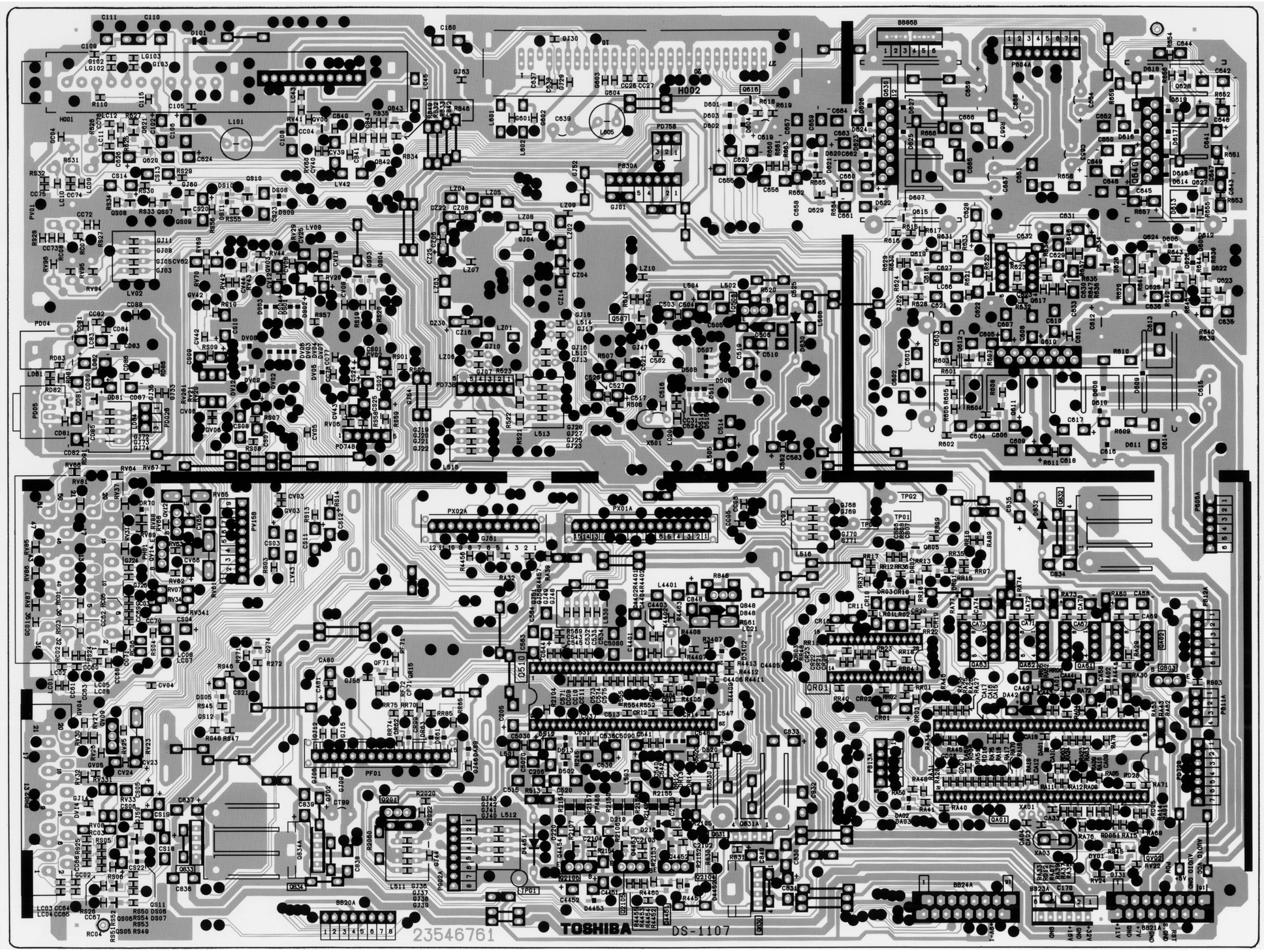

DEF/POWER BOARD PD0129D

BOTTOM (FOIL) SIDE

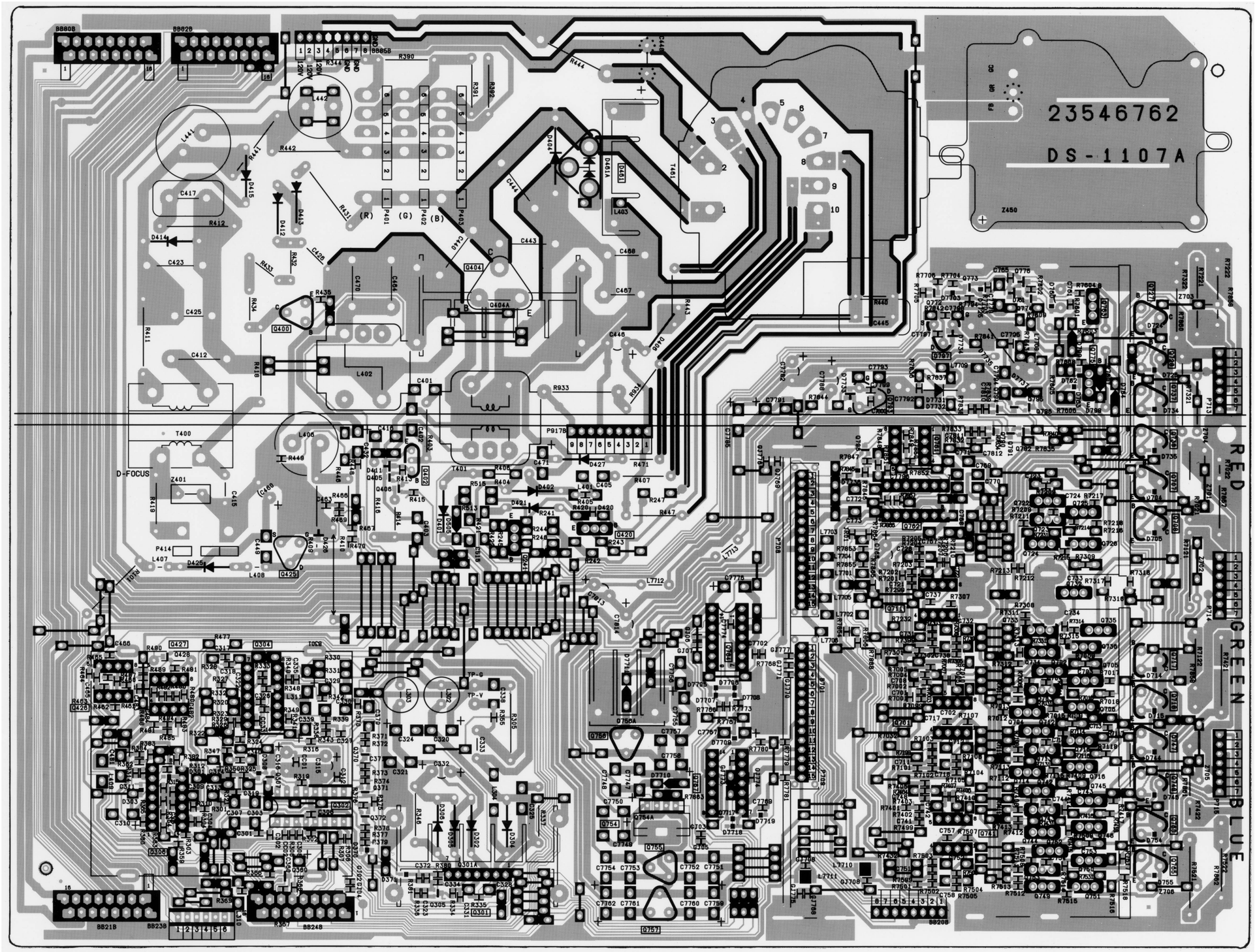

MAIN/POWER BOARD PD0132

BOTTOM (FOIL) SIDE

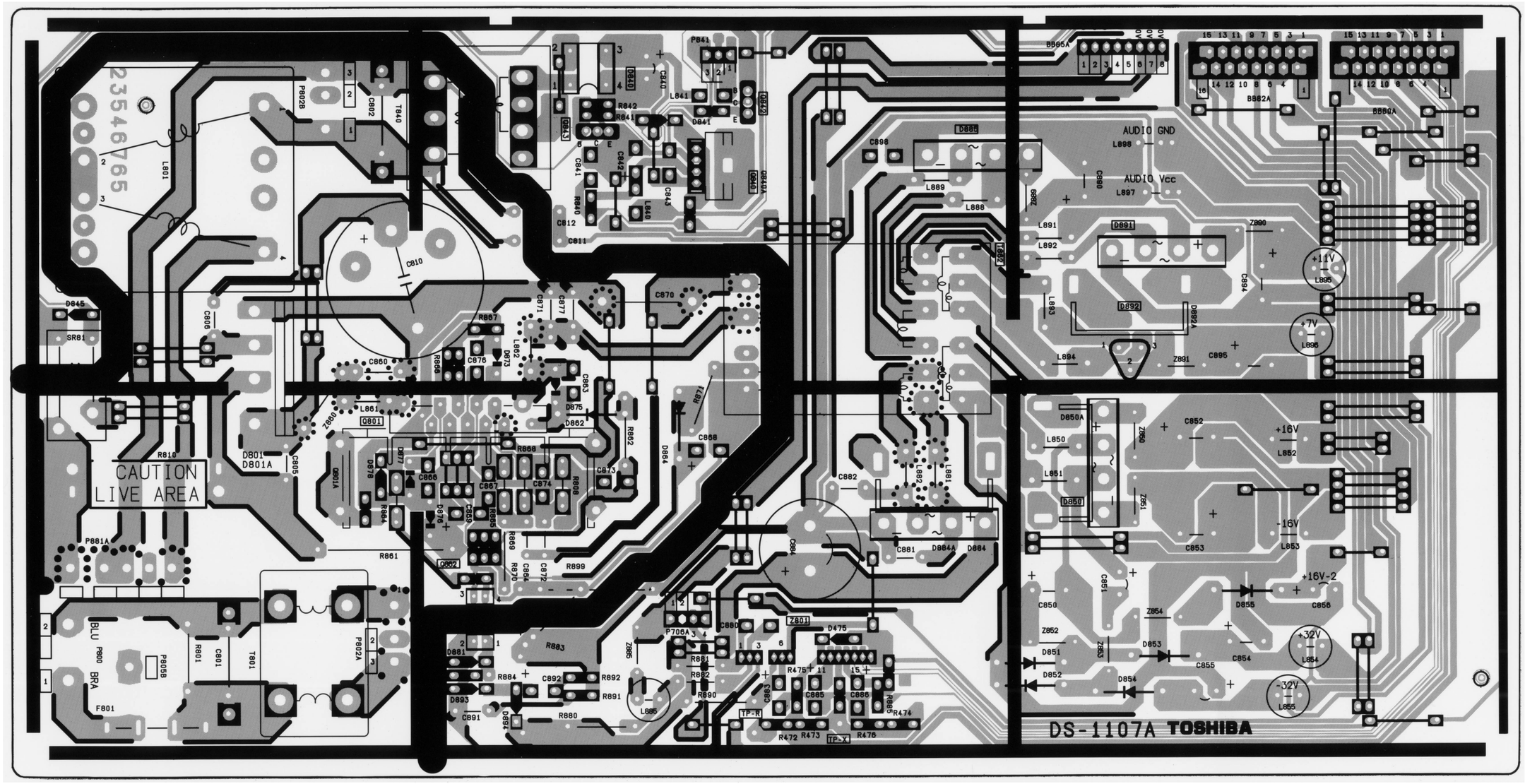

CRT-D RED BOARD PD0131B-1

BOTTOM (FOIL) SIDE

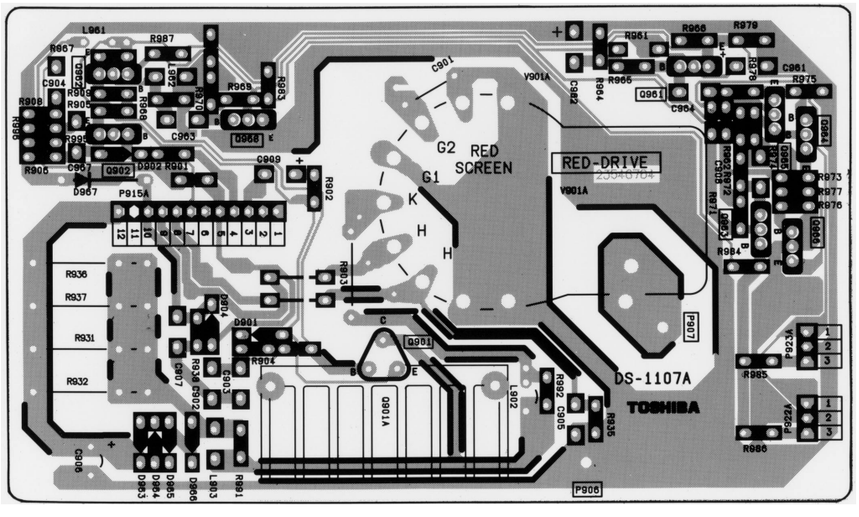

CRT-D GREEN BOARD PD0131B-2

BOTTOM (FOIL) SIDE

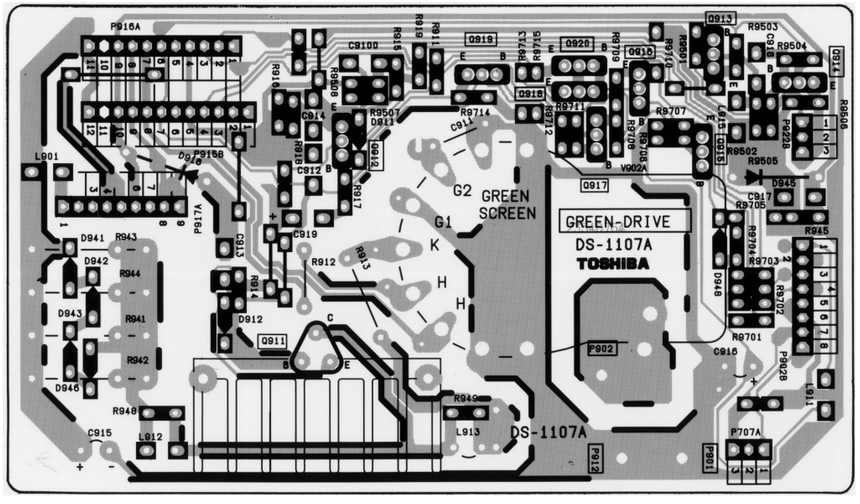

CRT-D BLUE BOARD PD0131B-3

BOTTOM (FOIL) SIDE

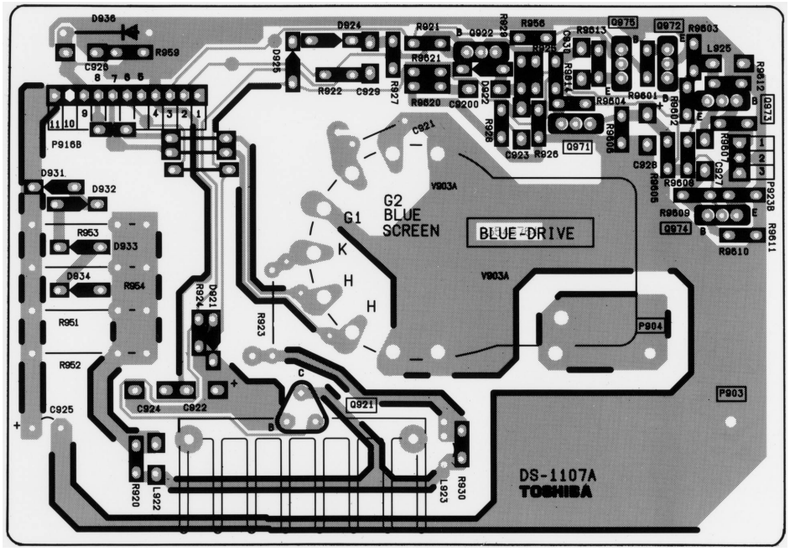

SVM GREEN BOARD PD0131B-4

BOTTOM (FOIL) SIDE

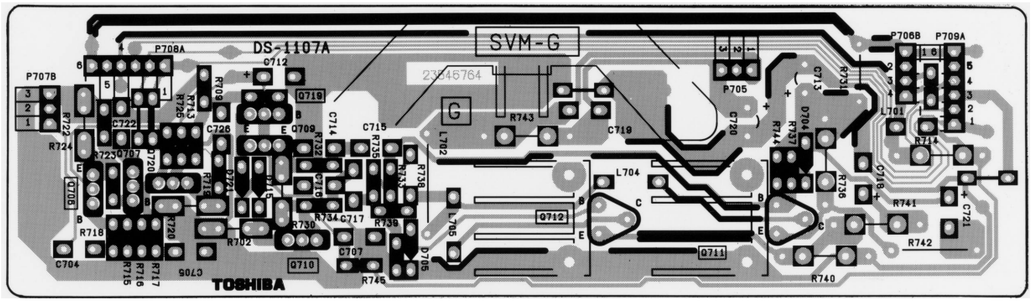

SVM RED BOARD PD0131B-5

BOTTOM (FOIL) SIDE

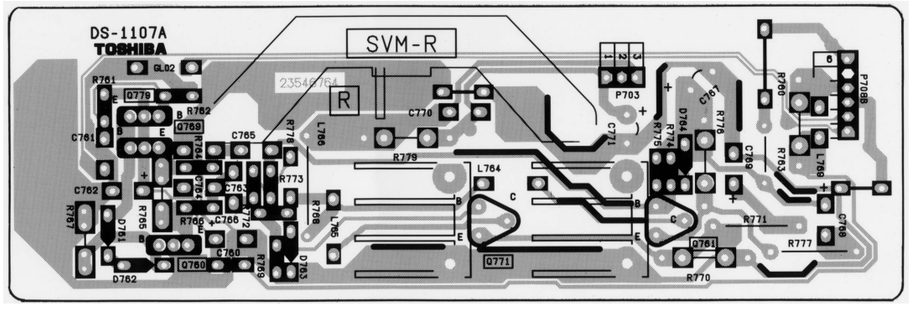

SVM BLUE BOARD PD0131B-6

BOTTOM (FOIL) SIDE

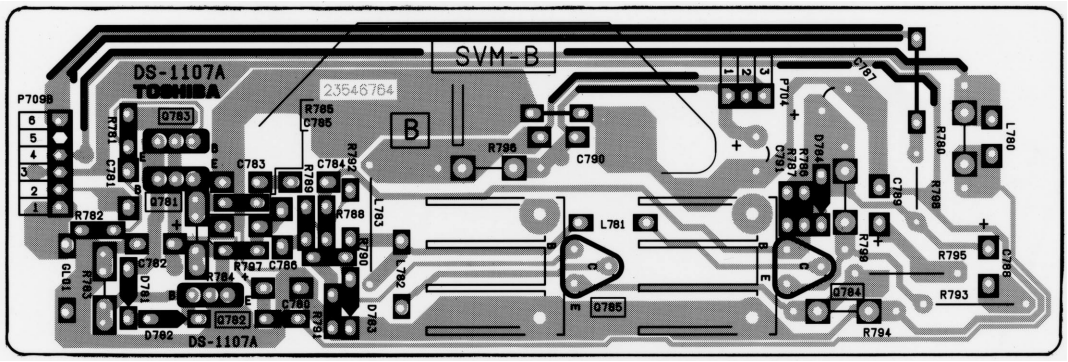

DFS BOARD PB9954

BOTTOM (FOIL) SIDE

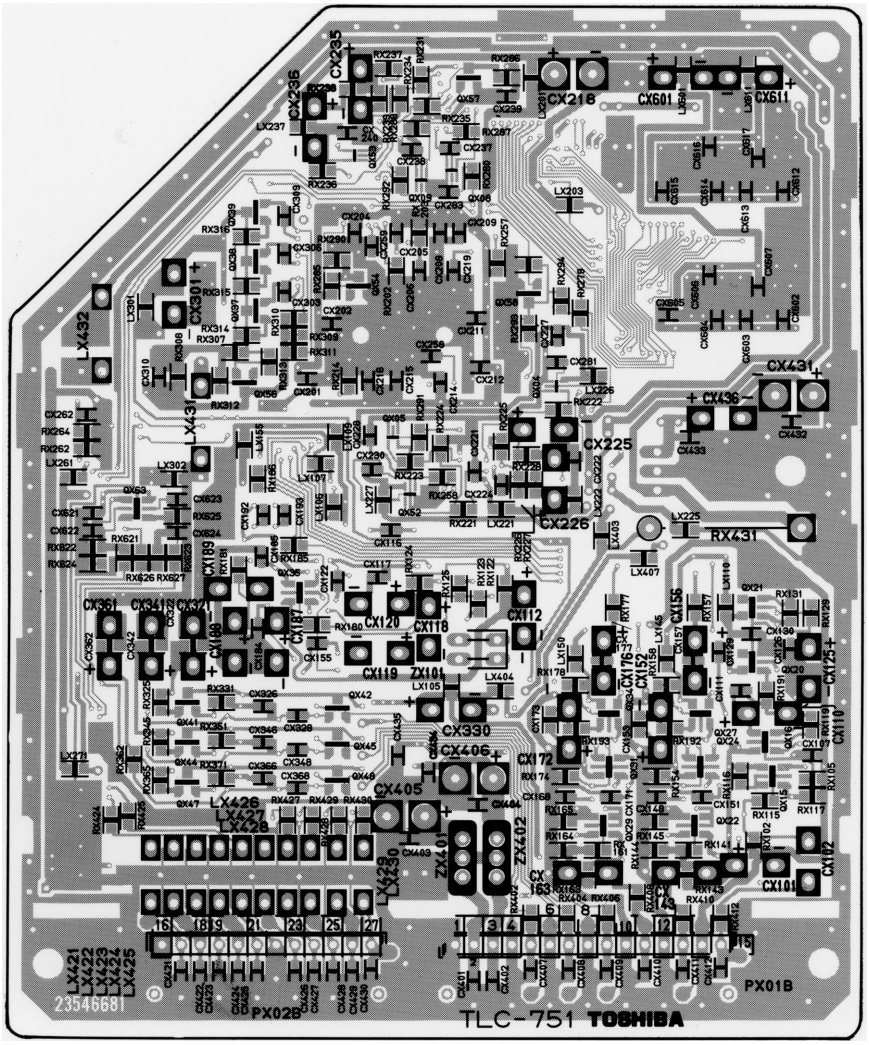

FRONT IN BOARD PD0208-1

BOTTOM (FOIL) SIDE

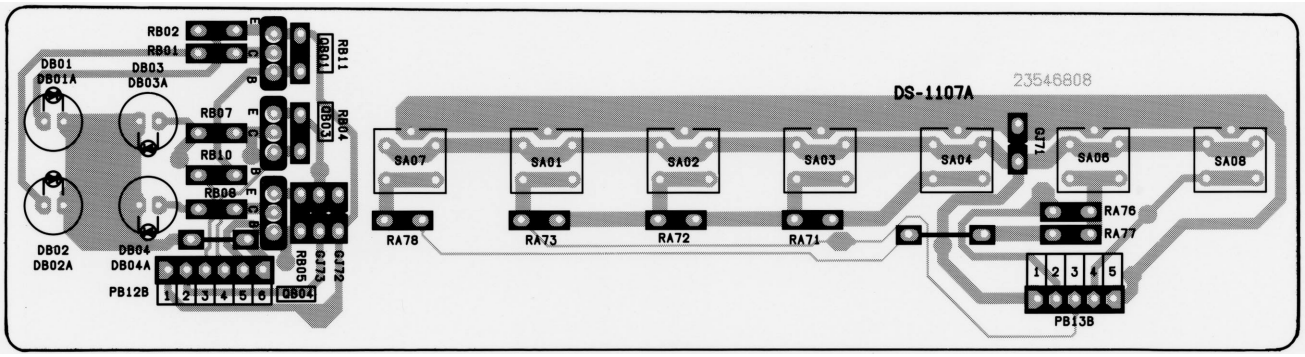

KEY-IND BOARD PD0208-3

BOTTOM (FOIL) SIDE

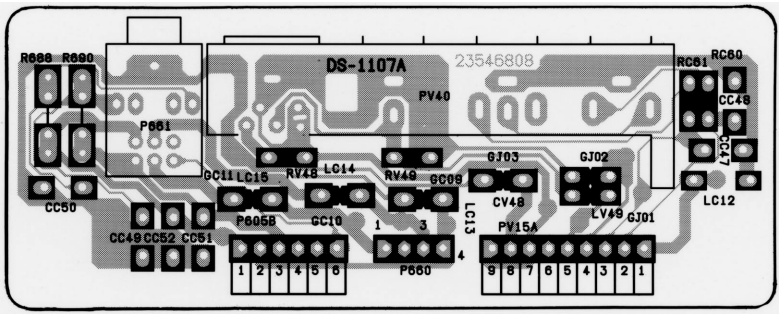

RMT IN BOARD PD0208-3

BOTTOM (FOIL) SIDE

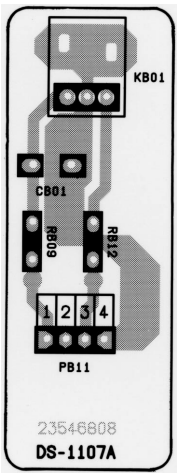

D-CONV BOARD PB9486G

BOTTOM (FOIL) SIDE

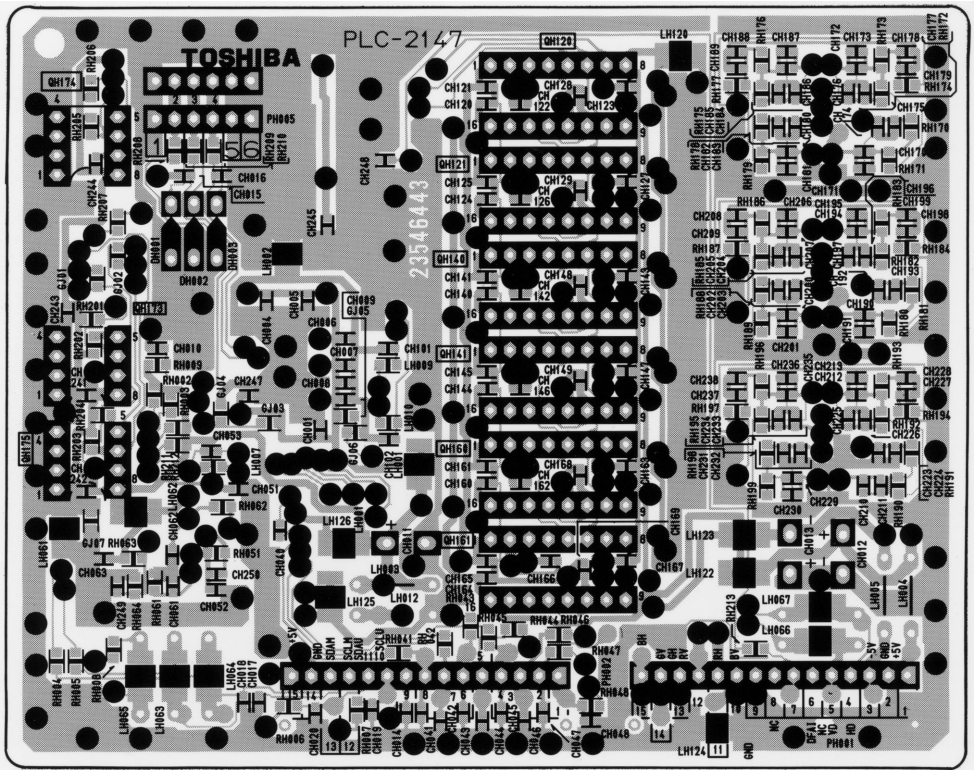

EPG-M2 BOARD PD0216

BOTTOM (FOIL) SIDE

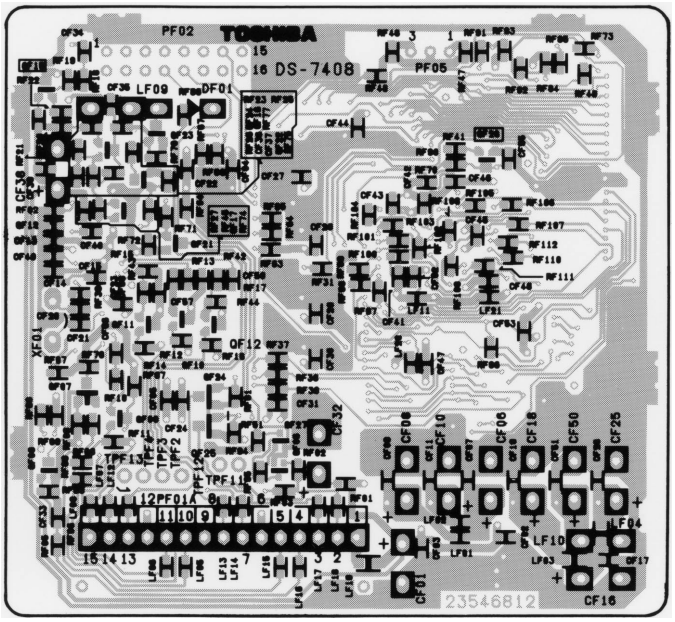

EPG-POWER BOARD PD0205

BOTTOM (FOIL) SIDE

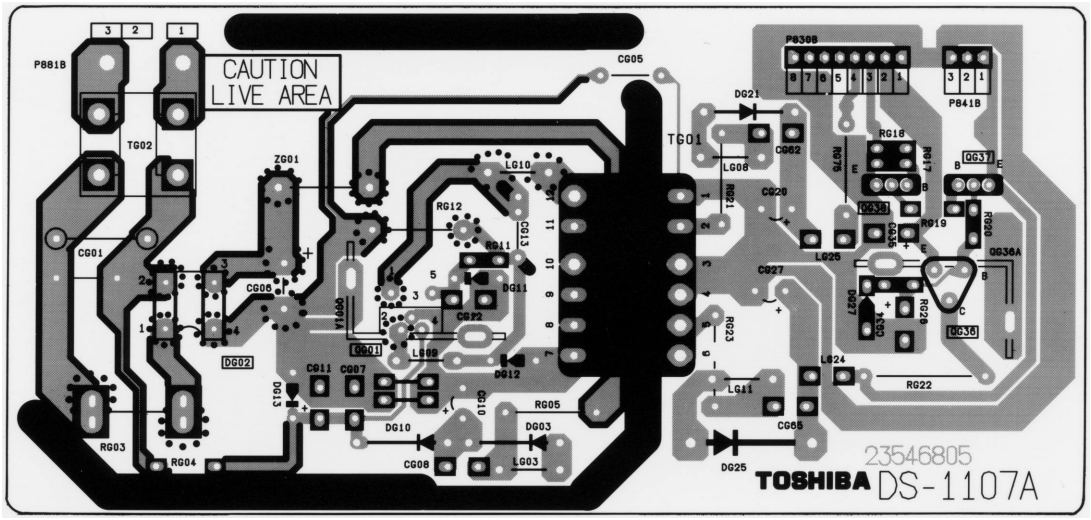

EXT-SP BOARD PD0206

BOTTOM (FOIL) SIDE

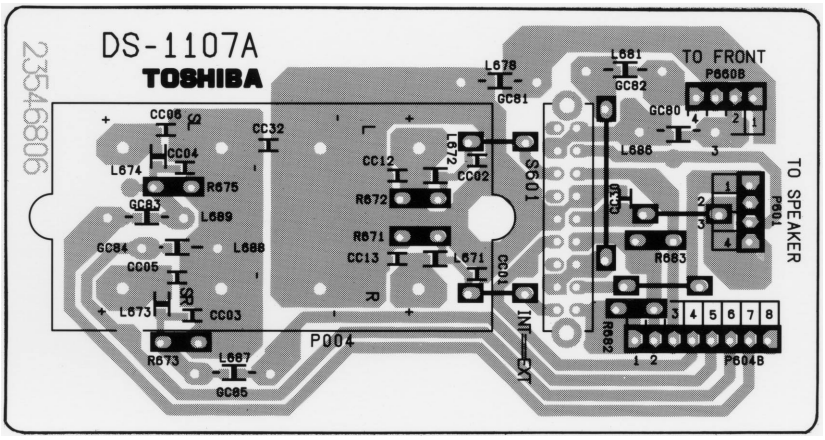

AC3 POWER BOARD PD0203
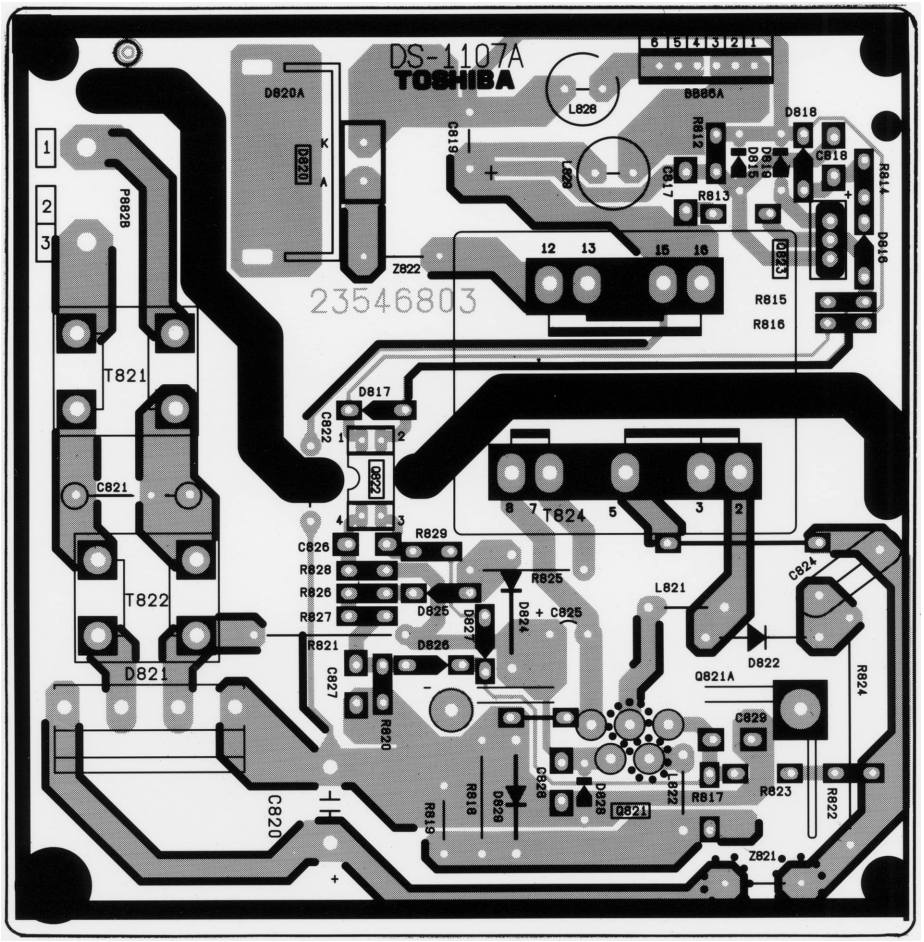
BOTTOM (FOIL) SIDE